CATALOG 2022

PRICES

WINCHES - Lifting and pulling solutions

MADE IN FRANCE

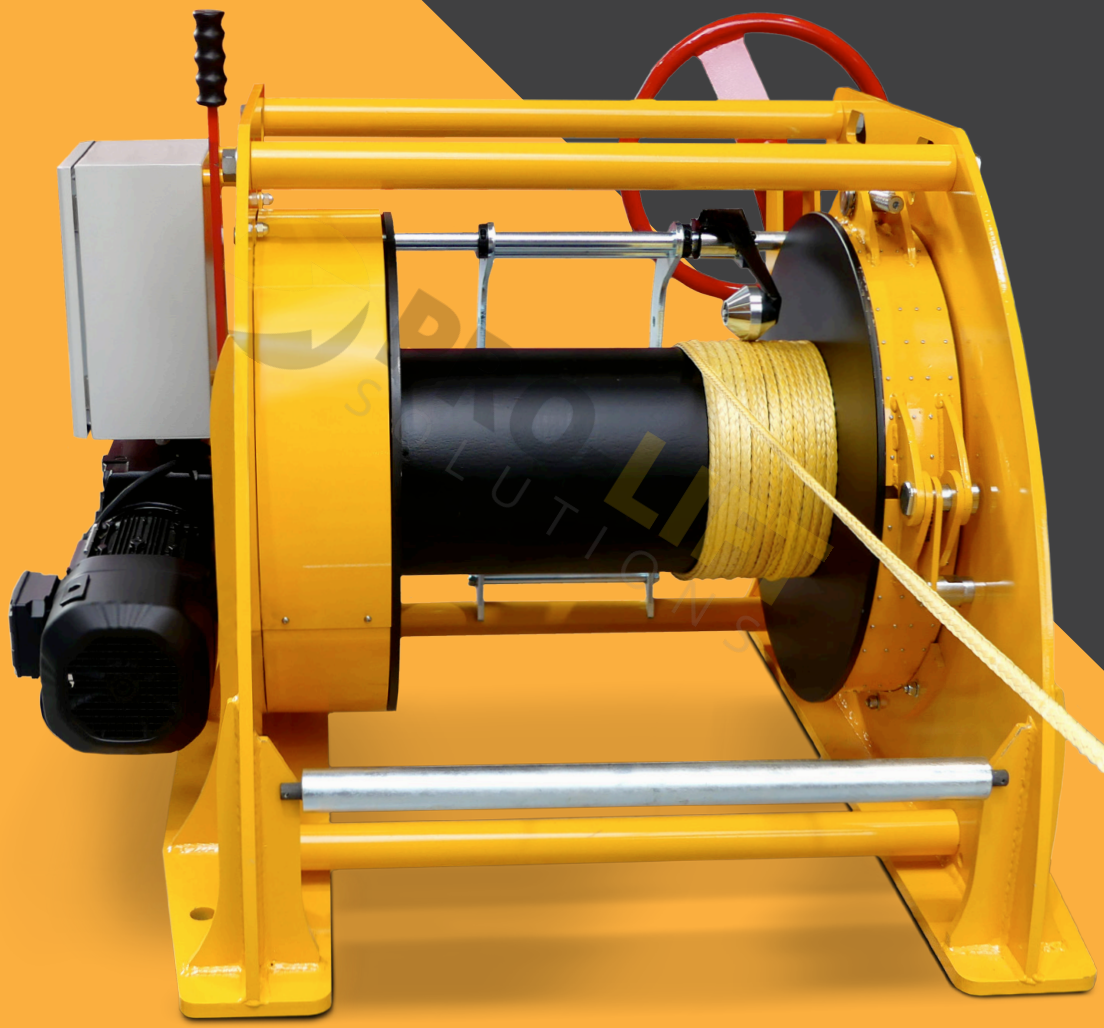

HUCHEZ

huchez.com

PRO-LIFT SOLUTIONS



WELCOME
to an industrial world of Quality

The 2022 edition of our catalogue is published amidst an era of unprecedented events.

Ideas are emerging today about tomorrow's world, making us think about new economic models that maintain quality whilst being more ecological and sustainable.

For Huchez, we continue our commitment to strengthen the closest supply sources for design and manufacture whilst maintaining quality products that provide longevity of use and provide the best in user safety :

· **R&D quality**, which designs and develops the products and solutions to comply with market needs and anticipate their evolution.

· **Quality of the product,** of which components and manufacturing process have made our brand reputation for more than 60 years.

· **Quality of service** founded on the commitment of our employees and partners who will accompany you throughout our relationship.

This edition highlights our new ranges of winches adapted to current uses and standards.

You will discover products that meet the needs of professionals in a wide variety of trades and industries.

Finally, this catalogue is also the start point for custom-made solutions with Huchez Engineering: It offers winch solutions from the most simple to the most specific and complex uses.

Thank you for your trust and confidence.



Antoine Huchez

President

Our prices are:
· VAT Free
· Ex-Works
· Without rope nor hook (except specific information)

Copyright – All rights reserved; any copying, even partial, is prohibited, law of 11 March 1957. INDUSTRIA, BOXTER, MANIBOX VS, MANIBOX GR, SECURITREUIL, PALANBOX, KILEV, MANISTOR, TIREX and MOTORBOX are registered trademarks of the company HUCHEZ.
The MANIBOX VS and GR winches, the TRB, TRBoxter, MANISTOR, PRIMO and TIREX winches are registered designs in all countries.
The information concerning the design, layout, materials and dimensions indicated in this catalogue are for information purposes only.

NATO agreement F 7480

PRO-LIFT SOLUTIONS



SUMMARY

EDITO 2

PRESENTATION 4

OUR SPECIAL ENGINEERED MAKES 6

MANY YEARS OF EXPERIENCE IN DIFFERENT BUSINESS AREAS SUPPORTING YOUR PROJECTS 10

NEW PRODUCTS 17

HAND WINCHES 20

PORTABLE MINI WINCH 30

ELECTRIC WINCHES 32

PETROL AND DIESEL WINCHES 71

GANTRY CRANES AND JIB CRANES 73

PERSONNEL LIFTING 77

SITE LIFTING 79

JACKS 82

ROPES, HOOKS AND OTHER ACCESSORIES 85

GENERAL 95

PRO-LIFT SOLUTIONS



HISTORIC WINCHES MANUFACTURER

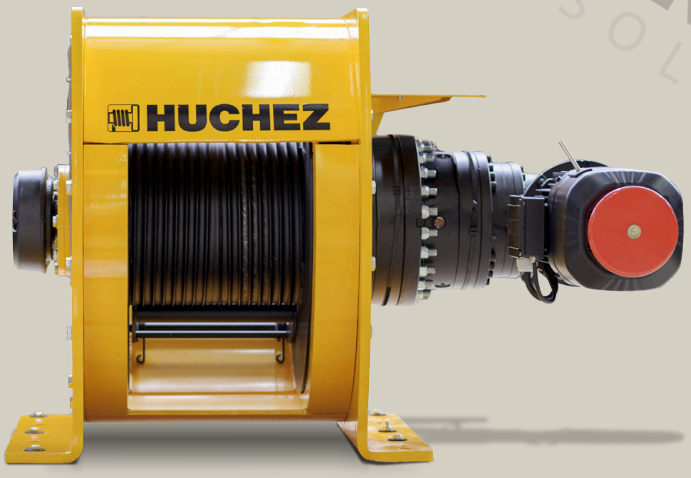

Since 1950, HUCHEZ designs, develops and manufactures manual, electric, hydraulic, petrol or diesel winches for lifting or pulling applications.

It is our tradition and our conviction to exclusively design and manufacture our products with the highest quality level, offering the warranty, to our customers and users, of reliability and long operating time.

In our workshop based in France, the operational excellence is daily implemented by all our employees and throughout manufacturing cycle of our products.

MADE IN FRANCE

DESIGNING

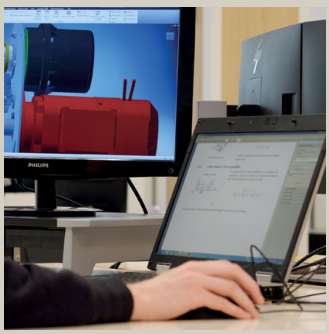

MACHINING



ASSEMBLYING



TESTING



RECENT IMPORTANT DATES

2000

Construction of the machining workshop: 1600 m² used to manufacture parts needed in all HUCHEZ winches.

2001

Since 2001, HUCHEZ is certified for its quality management system.

2016

HUCHEZ launches its new website.

2019

All of Huchez teams are located on the same site located 4 rue Michel Hammid in Ferrières.

KEY FIGURES

Industrial site of 4380 m².

53 employees.

Turnover of 8,5 millions €.

35% of its turnover made with export in more than 55 countries worldwide.

PEOPLE at the heart of our customer relationship

Our commercial policy goes beyond the simple customer-supplier relationship.

Every day, our sales team is attentive to you and your customers' needs in order to reach their expectations and assist them in their development.

We offer technical solutions in total compliance with the regulations in force.



Export Sales team.

+33 (0) 344 511 133

contact@huchez.fr

huchez.com

Huchez on social networks:

The values that drives us, have established a climate of trust and loyalty with all our customers, with all of you.

- Customer Support
- Professionalism
- Human Relations

Our ambition is simple:

To be a key partner offering reliable, sustainable, tailor-made, innovative, competitive, and added-value solutions.

PRO-LIFT SOLUTIONS

PERSONNEL LIFTING



Gantry crane holding a nacelle used during the maintenance of a rotating laminator in which jet engine crowns are made.



GMIP 140, Well Inspection Mobile Crane, used to lower engineers responsible for geological sampling into exploratory wells for mining.

Lifting personnel requires specific skills and equipment in order to guarantee the safety of those performing the work.

Two large manufacturers have therefore called **on the expertise and knowledge** of our **HUCHEZ Engineering** department, which has specialised in **designing and manufacturing tailored lifting solutions** since 2000.

Technical features

- Gantry crane with double winch (one for lifting and one anti-fall), one nacelle, one retractable gangway, different options supplied: Radio control, maintenance lifting bar for the installation, etc.
- Lifting speed: 5 m/min.
- Max. working depth: 8 m.
- Useful load : Max. 240 kg (2 pers. with their tools).
- Equipment approved by certifying agency.

- The assembly consists of a trailer, a main winch, a safety follow-up winch, an ergonomic seat (with harness, fall protection, radio control, lamps, tablet support, axe, etc.) and a petrol-powered generator.
- Average lifting speed: 15 m/min (on adjustable speed drive).
- Max. stroke: 115 m.
- Max. useful load: 140 kg (1 person, tools and samples included).
- Maximum load when moving: 750 kg.

ATEX EXPLOSION PROOF WINCHES

The ATEX 94/9/CE directive is applied to apparatuses (electrical, mechanical, hydraulic, etc.) intended for use in explosive atmospheres (AT-EX), in other words one that, given the local and operational conditions, is liable to become explosive due to the presence of a mixture of inflammable gases, vapours, mists or powers with air under the atmospheric conditions.

According to requirements, our winches or some of their components can meet these standards and are tailored to meet the specific requirements of hazardous environments such as those found in the chemical and petrochemical sectors, as well as those in nuclear power stations, etc.



Lifting winch with ATEX components (electrical unit, upper and lower limit switch, motor, reduction gear).



ATEX lifting winch used on an oil platform.

Technical features

- Stainless steel structure and rods.
- Capacity on the top layer: 1500 kg.
- Lifting speed on the top layer: 4.3 m/min.
- Rope capacity: 120 m, 12 mm dia.
- Equipment for zone 2 gas (category 3).
- Capacity on the top layer: 2000 kg.
- Lifting speed on the top layer: 5.5 m/min.
- Rope capacity: 60 m, 12 mm dia.

INNOVATIVE SOLUTIONS



Specific solution developed for a company belonging to a French food industry group for rapidly loading and unloading railway carriages that **transport bottles used in the production of natural mineral water**. This task was previously carried out manually.

HUCHEZ Engineering also provides innovative solutions in all sectors of activity.

Technical features

- Arm system on the platforms between two loading tracks. Each winch positioned between two carriages.
- The handlers are controlled by the same radio control both for winding and unwinding the rope.
  Load: 150 daN.
- Speed: 25 m/min (45 m/min for rapid emptying).
- Textile rope – 28 m, 5 mm dia. – with protection handle, sleeve and hook.
- These winches are also fitted with a deflector and rope holding pressure rollers.



- Winch installed on the foredeck of the vessel and used to recover the hull cleaning robot.
- Capacity : 250 kg.
- Adjustable speed : from 2.6 to 26 m/min.
- Rope capacity: 300 m, 5 mm dia.
- Motor : 1.1 kW – IP66 protection and marine paint.

CAPSTANS

On request, HUCHEZ designs and manufactures reliable and high-performance horizontal and vertical capstans.

Technical features



Capstan with foot pedal control. Capacity: 1.5 t. Speed: 25 m/min.





Capstan. Waggon pulling.



Horizontal capstan to pull waggons.



Electric capstans (capacity: 20 t). Marine application.



Capacity: 1.5 t. Speed: 25 m/min.



Capstan with foot pedal control.

SHOW-BUSINESS INDUSTRY







Over the years, HUCHEZ has developed and designed manual and electric winches adapted to the entertainment world. These winches are used to manipulate, position accurately and safely any kind of stage or theater equipment (sound elements, lighting, sets, chandeliers...).







PRO-LIFT SOLUTIONS

MINES AND QUARRIES

Many years of experience in different industries supporting your projects

Well-known for their manufacturing quality and solid construction, HUCHEZ winches are regularly chosen to tension conveyor belts which are necessary to move materials over large distances (aggregates, minerals, etc.), to lift counterweights before working on them, or even to adjust the height of the arms of these conveyors.









BUILDING

HUCHEZ offers winches for all kinds of applications: Lifting materials on renovation sites, hoists, etc.





PUBLIC WORKS

For many years, HUCHEZ has supplied to well-known companies in public works (motorway construction, works of art, etc.) both in France and abroad.

For these construction sites, HUCHEZ is even able to offer adapted solutions using standard equipment with capacities up to several dozen of tons.



PRO-LIFT SOLUTIONS

INDUSTRY



Many years of experience in different industries supporting your projects

In order to meet the highest demands of manufacturers in the aeronautical, automobile and food industries, HUCHEZ offers winches, jib cranes and gantry cranes adapted to multiple applications: Lifting or pulling loads, production lines layout, etc.







OFF-SHORE

HUCHEZ hydraulic, manual or electric winches offer a large choice of options (ATEX certification, specific surface coating protection...) meeting the requirements of the complex environments in which they are used.







MARITIME AND WATERWAY TRANSPORT, PORT SECTOR

Many years of experience in different industries supporting your projects

HUCHEZ designs and develops winches and also capstans that are used on shipbuilding sites, in port activity areas... for mooring and towing operations of barges, boats,...

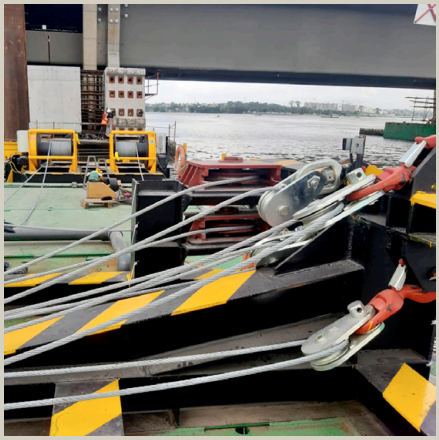





ENERGY AND ENVIRONMENT SECTORS

Our winches can be found in nuclear or electric power plants, wind energy, hydroelectric dams to open and close doors or valves, lifting loads during maintenance operations.







NEW PRODUCTS

Electric winches



INDUSTRIA from 1 to 10 t.

Long drum models.
Models with FEM/ISO 3m/M6 classification.

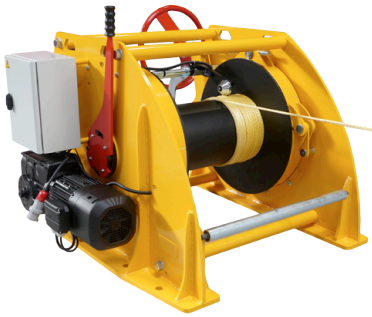

TRAKZIO-R from 2.4 to 15 t in pulling/hauling and from 20 to 40 t holding loads.



TRAKZIO from 1.3 to 15 t in pulling/hauling.



AGON 300 kg
Motorised lifting equipment for sport and cultural facilities : Consult us.

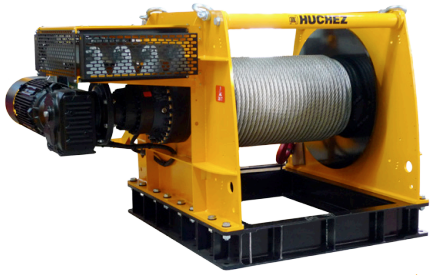

KOLOSS from 12 to 35 t in lifting and up to 50 t in pulling/hauling.

Forest winch



FORESTBOX
from 400 to 1800 kg.

Options and equipments

Wrist mounted radio control, wire rope kits...

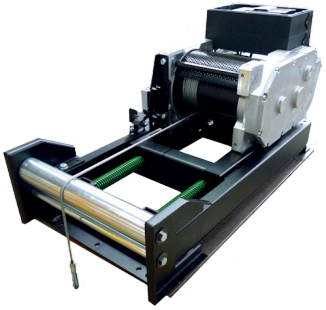

Site lifting



Mini electric winch
PALANBOX
EC Certified by Huchez.
80, 160 and 230 kg.

Accessories



940 – Mobile storage rack for accessories

PRO-LIFT SOLUTIONS

Archimède

The configurator HUCHEZ



You are a distributor?

This digital tool is dedicated to you!

Do not hesitate to get in touch with your usual contact.

PRO-LIFT SOLUTIONS

WINCHES



European directives
and standards applicable to
lifting equipment are as follow:
- 2006/42/EC Machine Directive.
  - On electric winches are compulsory in lifting: emergency stop and limit switch as well as a load limiter for loads of more than 1000 kg.
- The FEM 1.001 1998 standard.
- The NF EN 13157, 14492-1 and 2 standards.

Equipment delivered with EC or partly completed machine declaration of conformity and user manual.

Lifting is a load moving operation requiring, at a given time, a level change. (MD 2006/42/EC).

Pulling is a horizontal displacement operation of loads. In the event the traction stops, no load movement takes place (NF EN 14492-1:2016 Standard).

Note: Pulling on a slope is considered as lifting.

MAX

Maxi. capacity.

STAINLESS STEEL

Stainless steel range.

Solicitation level.

IN OUT IN OUT

Indoor, Outdoor, indoor/outdoor use.

Equipment available on ARCHIMEDE platform.

TIREX



Capacities 150 and 300 kg.
Hand spurgear winches benefiting from the qualities of composite materials and aluminum, mostly their anti-corrosion properties.

- Moderate use.
- Indoor - outdoor.
- Chassis made of an aluminum frame.
- Composite drum.
- Planetary reducer in sealed casing.
- Mounting plate in galvanised steel (standard model) or in 316L anti-corrosion stainless steel (stainless steel model).
- Flat mounted.
- 4 fixation points.
- Removable crank.
- Free spooling drum, only when not in load.
- Automatic brake in composite material.
- Failsafe system for correct rope winding direction (patented).

Options ▷ Wire rope (m/l or kit) and hook (see p. 86-90).

Strong points



△ Accessible and very safe self-tightening cable clamp.



△ Rope guide for correct winding of the wire rope.

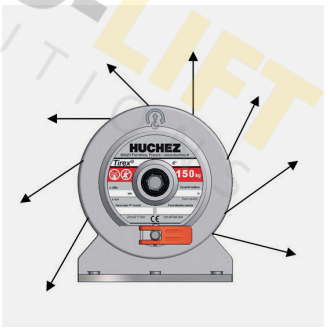

△ Many possibilities of wire rope exits (more than 250°).



△ Reducer with satellite gears offering excellent mechanical balance and low effort on the crank.

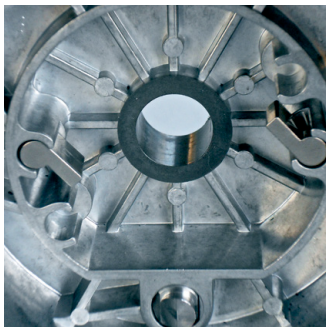

△ Maximum safety : 2 ratchets.



△ Drum release impossible when in load.



△ Removable clip-on crank with ergonomic and comfortable rotating handle.

PRO-LIFT SOLUTIONS

COMPLETE DATA SHEET ON huchez.com

Dimensions

Dimensions in mm.

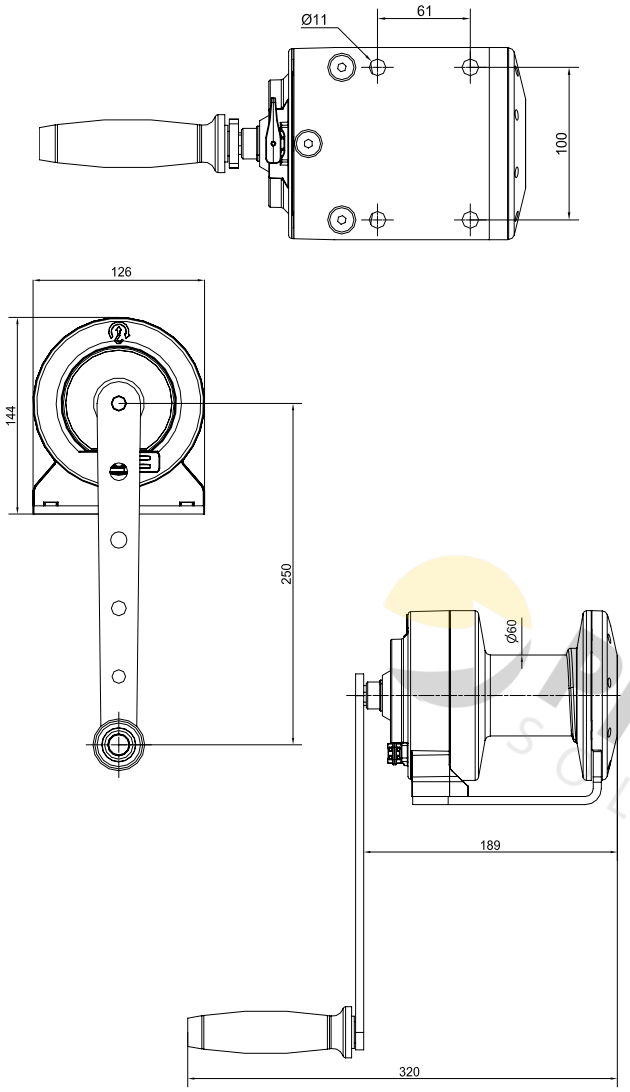

Applications

Lifting of doors, opening of hatches...

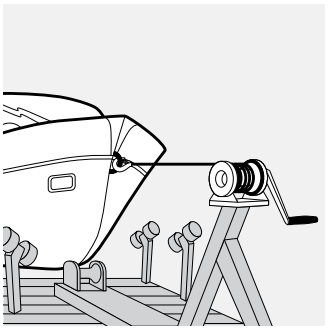

Moving a boat.

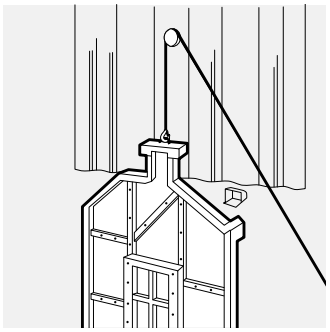

Scenery handling.



Lifting equipment from a davit crane.

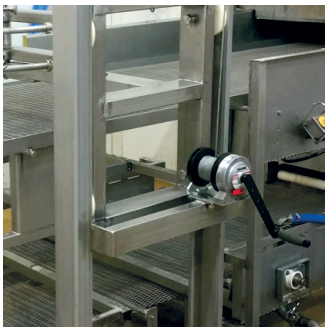

Lifting equipment from a lifting table in the food industry.



Installation of a earthing mast for a SNCF cradle.



Use of the Tirex on a loading arm.



Lifting probes.

Technical characteristics

References	TIREX 150	TIREX 300
Capacity top layer kg	**150**	**300**
Capacity 1st layer kg	250	400
Nb of layers	6	3
Maxi. drum capacity m	24	8.5
1st layer drum capacity m	2.5	2
Wire rope Ø mm	4	5
Lift per crank revolution mm	40	41
Maxi. crank effort kg	8	14
Weight (without wire rope) kg	3.7	3.7
Price €		
Standard model	**349**	**413**
Stainless steel model	**420**	**493**

The wire rope diameter corresponds to the capacity on the top layer with a safety coefficient of (about) 5 when lifting with non-rotating wire rope.

COMPLETE DATA SHEET ON huchez.com

MANIBOX GR



Capacities from 300 to 2750 kg. Hand spurgear winches.

- Daily use.
- Compact and rugged construction with steel frame.
- Machined parts.
- Steel or cast iron drum depending on models.
- Painted, galvanised or stainless steel frames available.
- Flat mounted or wall mounted positions for GR 300/530/500.
- 4 fixation points.
- Fully protected gear system.
- Removable crank positioned on the left hand side for the GR 300/530/500/750 and on the right hand side for the GR 1000/1450/2000/2750.
- Free spooling drum, only when not in load.
- Composite material automatic brake.
- Failsafe system for correct rope winding direction (patented).

Options ▷ Wire rope (m/l or kit) and hook (see p. 86-90).

Strong points



△ Highly reliable cable clamp not requiring special tool with rope winding direction guide.



△ Ratchet automatic brake with stainless steel spring.



△ Ergonomic and confortable rotating handle.

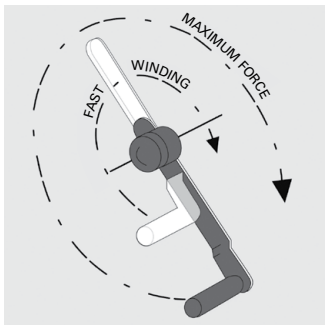

△ Removable crank. Adjustable crank handle for fast winding or on the contrary for maximum force.

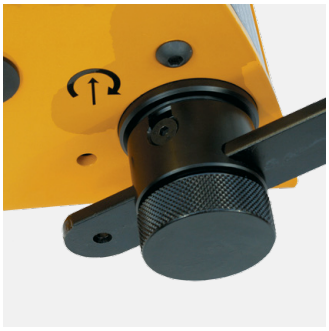

△ Captive crank adjusting knob.



△ Drum release impossible when in load.



△ With stainless steel frame.



△ Crank positioned on the right hand side for GR 1000/1450/2000/2750.

PRO-LIFT SOLUTIONS

COMPLETE DATA SHEET ON huchez.com

Dimensions

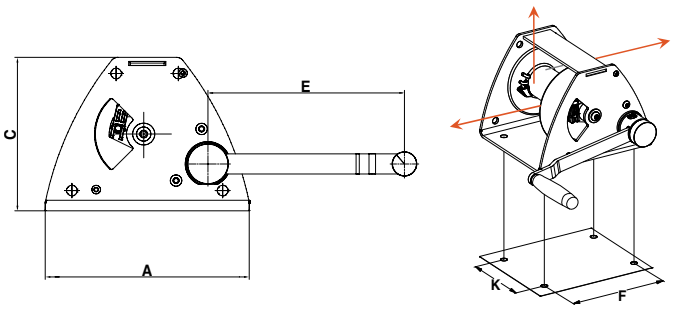

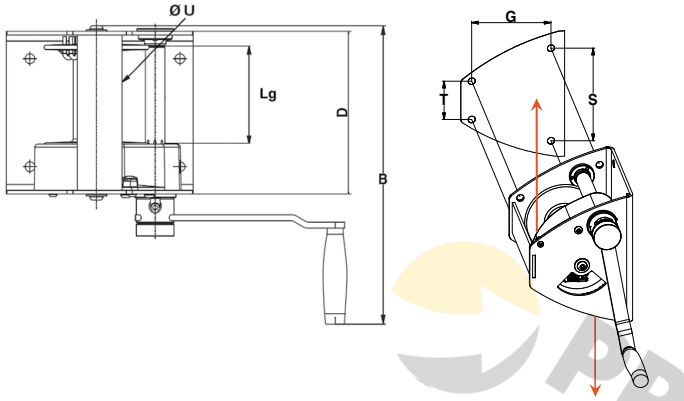

Models	GR 300	GR 530 PREM	GR 500	GR 750 PREM	GR 1000	GR 1450 PREM	GR 2000	GR 2750 PREM
A mm	249	249	249	249	410	410	510	510
B mm	400	400	400	400	485	485	585	585
C mm	190	190	190	190	305	305	360	360
E mm	240	240	240	240	340	340	340	340
F mm	200	200	200	200	370	370	440	440
G mm	145	145	145	-	-	-	-	-
K mm	144	144	144	144	236	236	325	325
S mm	184	184	184	-	-	-	-	-
T mm	76	76	76	-	-	-	-	-
Ø U mm	62	62	62	62	103.5	103.5	121	121
Lg mm	122	122	122	122	176	176	237.5	237.5

Applications

- Chandelier lifting.
- Sport arena, performance halls (scenery...)...
- Transport (barges)...



Installation of a reel on a trailer.



Opening of a sluice gate.



Positionning of paper rolls on a work station.



Hatch lifting.



Manipulation of a crinoline ladder.

Technical characteristics

References	GR 300	GR 530 PREM	GR 500	GR 750 PREM	GR 1000	GR 1450 PREM	GR 2000	GR 2750 PREM
Capacity top layer kg	**300**	**530**	**500**	**750**	**1 000**	**1 450**	**2 000**	**2 750**
Capacity 1st layer kg	500	530	750	750	1 450	1 450	2 750	2 750
Nb of layers	6	1	4	1	4	1	3	1
Maxi. drum capacity m	38	4	18	3	30	5	25	6
1st layer drum capacity m	4	4	3	3	5.5	5	6	6
Wire rope Ø mm	5	6	7	7	9	10	13	13
Lift per crank revolution mm	30.5	30.5	31.5	31.5	16	16	9.5	9.5
Maxi. crank effort kg	12.5	12.5	19	19	14.5	14.5	16.5	16.5
Weight (without wire rope) kg	15	15	15	15	44	44	83	83
Price €								
Painted frame model	**519**	**519**	**646**	**646**	**977**	**977**	**1 730**	**1 730**
Galvanised frame model	**574**	**574**	**700**	**700**	**1045**	**1045**	**1 990**	**1 990**
Stainless steel frame model	**740**	**740**	**869**	**869**	**1 450**	**1 450**	**2 390**	**2 390**

The wire rope diameter corresponds to the capacity on the top layer with a safety coefficient of (about) 5 when lifting with non-rotating wire rope.

MANIBOX VS



Capacities from 250 to 3500 kg. Hand wormgear winches.

- Daily use.
- Compact and rugged construction with steel frame.
- Machined parts.
- Steel or cast iron drum depending on models.
- Painted, galvanised or stainless steel frames available.
- Flat mounted or wall mounted. 4 fixation points.
- Fully protected gear system.
- Removable crank positioned on the left hand side for VS 250/320/500/750/3000/3500 and on the right hand side for VS 1000/1450/1500/2000/2500.
- Free spooling drum (except VS 250/320), only when not in load.
- Composite material automatic brake.
- Failsafe system for correct rope winding direction (patented).

Options ▷ Wire rope (m/l or kit) and hook (see p. 86-90).

Strong points



△ Crank positioned on the right hand side for VS 1000/1450/1500/2000/2500.

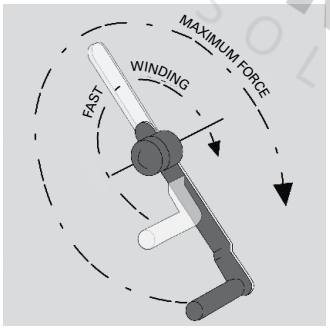

△ Removable crank. Adjustable crank handle for fast winding or on the contrary for maximum force.



△ Highly reliable cable clamp not requiring special tool with rope winding direction guide.



△ Maximum safety : Ratchet automatic brake with stainless steel spring + worm gear.



△ Ergonomic and comfortable rotating handle.



△ Captive crank adjusting knob.



△ Drum release impossible when in load (except VS 250/320 without drum release).

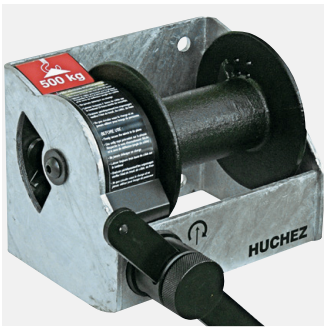

△ With galvanised frame.

COMPLETE DATA SHEET ON huchez.com

Dimensions

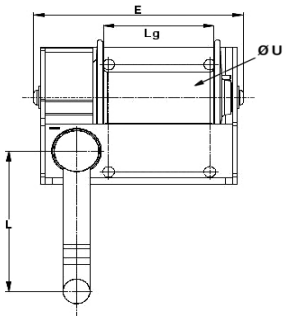

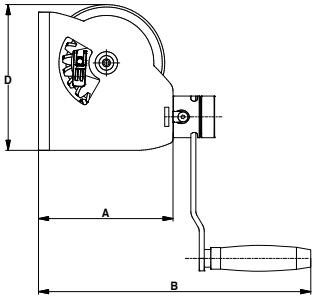

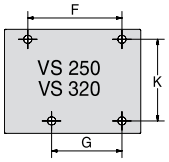

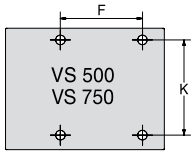

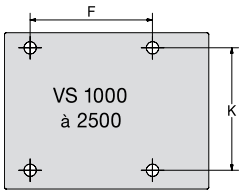

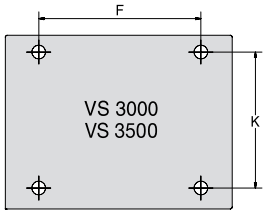

Models	VS 250	VS 320 PREM	VS 500	VS 750 PREM	VS 1000	VS 1450 PREM	VS 1500	VS 2000 PREM	VS 2000	VS 2500 PREM	VS 3000	VS 3500 PREM
A mm	140	140	162	162	302	302	350	350	356	356	480	480
B mm	307	307	325	325	470	470	518	518	520	520	640	640
D mm	142	142	175	175	302	302	330	330	390	390	450	450
E mm	206	206	233	233	322	322	370	370	420	420	530	530
F mm	130	130	112	112	167	167	200	200	260	260	390	390
K mm	100	100	130	130	250	250	250	250	295	295	380	380
L mm	240	240	240	240	340	340	340	340	340	340	340	340
Ø U mm	50	50	62	62	103,5	103,5	105	105	121	121	145	145
Lg mm	97	97	122	122	176	176	220	220	262	262	289	289

Applications

- Sport arena, performance halls (scenery...).
- Water treatment...



Opening of a sluice gate.



Conveyor belt tensionning.



Lifting molds in the industry.



Specific winch for stage industry.

Technical characteristics

References	VS 250	VS 320 PREM	VS 500	VS 750 PREM	VS 1000	VS 1450 PREM	VS 1500	VS 2000 PREM	VS 2000	VS 2500 PREM	VS 3000	VS 3500 PREM
Capacity top layer kg	**250**	**320**	**500**	**750**	**1 000**	**1 450**	**1 500**	**2 000**	**2 000**	**2 500**	**3 000**	**3 500**
Capacity 1st layer kg	380	380	750	750	1 450	1 450	2 000	2 000	2 500	2 500	3 500	3 500
Nb of layers	4	2	4	1	4	1	3	1	2	1	2	1
Maxi. drum capacity m	15	6	18	3	30	5	23	5.5	17	7	18.5	7.5
1st layer drum capacity m	2.5	2.5	3	3	5.5	5	5.5	5.5	7	7	7.5	7.5
Wire rope Ø mm	5	6	7	7	9	10	11.5	12	13	13	16	16
Lift per crank revolution mm	17	17	11	11	8	8	6	6	5	5	3	3
Maxi. crank effort kg	11	11	14	14	14	14	14	14	14.5	14.5	15	15
Weight (without wire rope) kg	7.5	7.5	12	12	37.5	37.5	52	52	80	80	140	140
Price €												
Painted frame model	**633**	**633**	**919**	**919**	**1 077**	**1 077**	**1 692**	**1 692**	**1 792**	**1 792**	**3 424**	**3 424**
Galvanised frame model	**691**	**691**	**986**	**986**	**1 135**	**1 135**	**1 809**	**1 809**	**2 054**	**2 054**	**3 720**	**3 720**
Stainless steel frame model	**794**	**794**	**1 090**	**1 090**	**1 463**	**1 463**	**2 300**	**2 300**	**2 757**	**2 757**	**5 230**	**5 230**

The wire rope diameter corresponds to the capacity on the top layer with a safety coefficient of (about) 5 when lifting with non-rotating wire rope.

631.AFL

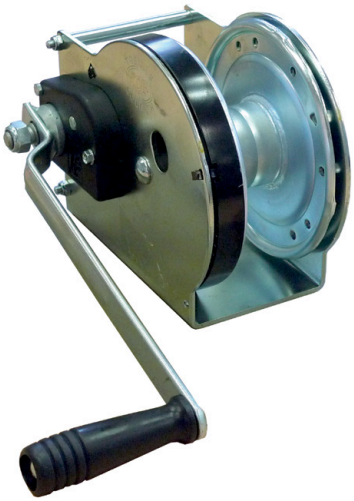

Capacities from 80 to 490 kg. Self-braked hand winches.

- Occasional use.
- Chassis in bichromated galvanized steel (standard model) or in 316L anti-corrosion stainless steel (stainless steel models, ref. «X»).
- Flat mounted. 3 fixation points.
- Fixed crank.
- Ratchet and friction automatic brake.

Options ▷ Wire rope (m/l or kit) and hook (see p. 86-90).

Strong points

- Small footprint.

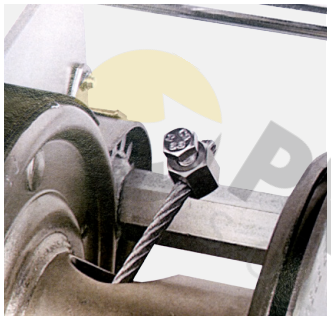

△ Quick and easy installation of the wire rope. Cable clamp included.



△ Gear protection.



△ Stainless steel model.

Applications

- Short lifting applications (chandeliers...).



△ Lifting of a filter in a tank.



△ Lifting of a tank in the food industry.

Dimensions

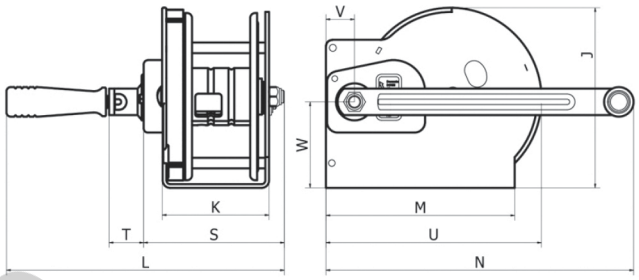

Models	4 AFLM	4 AFL	6 AFL	8 AFL	12 AFL
L mm	211	250	265	265	294
S mm	78	117	132	132	155
J mm	96	96	128	167	170
N mm	195	197	240	290	295

Models	4 AFLMX	4 AFLX	6 AFLX	8 AFLX	12 AFLX
L mm	211	250	265	265	294
S mm	78	117	132	132	155
J mm	96	96	128	167	170
N mm	195	197	240	290	295

Technical characteristics

References	4 AFLM	4 AFL	6 AFL	8 AFL	12 AFL
Capacity top layer kg	**80**	**190**	**240**	**270**	**490**
Capacity 1st layer kg	190	340	500	650	900
Maxi. drum capacity m	8	10	12	19	12
Wire rope Ø mm	3	4	5	6	7
Weight (without wire rope) kg	2.2	2.5	3.6	5.5	7.4
Price €	**147**	**152**	**165**	**211**	**331**

References	4 AFLMX	4 AFLX	6 AFLX	8 AFLX	12 AFLX
Capacity top layer kg	**80**	**190**	**240**	**270**	**490**
Capacity 1st layer kg	190	340	500	650	900
Maxi. drum capacity m	8	10	12	19	12
Wire rope Ø mm	3	4	5	6	7
Weight (without wire rope) kg	2	2.5	3.6	5.5	7.4
Price €	**676**	**755**	**877**	**1 191**	**1 783**

The wire rope diameter corresponds to the capacity on the top layer with a safety coefficient of (about) 5 when lifting with non-rotating wire rope.

COMPLETE DATA SHEET ON huchez.com

MANISTOR

Capacities 100 and 200 kg. Wall mounted hand winches.

- Moderate use.
- Aluminum structure.
- Mechanical parts in anti-corrosion treated steel.
- Polymer drum.
- Wall mounted.
- 3 fixation points.
- Removable crank.
- Automatic brake in composite material.

Options ▷ Wire rope (m/l or kit) and hook (see p. 86-90).

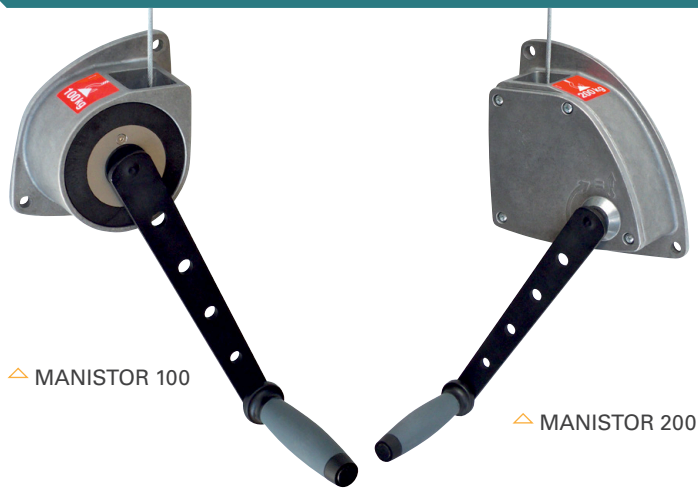

MANISTOR 100

MANISTOR 200

Strong points

- Small footprint.
- Very safe cable clamp with 2 pressure screws.

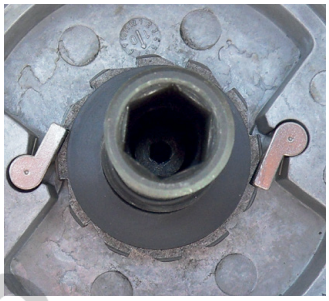

Maximum safety : 2 ratchets.



Removable clip-on crank with ergonomic and confortable rotating handle.

Dimensions

Dimensions in mm.

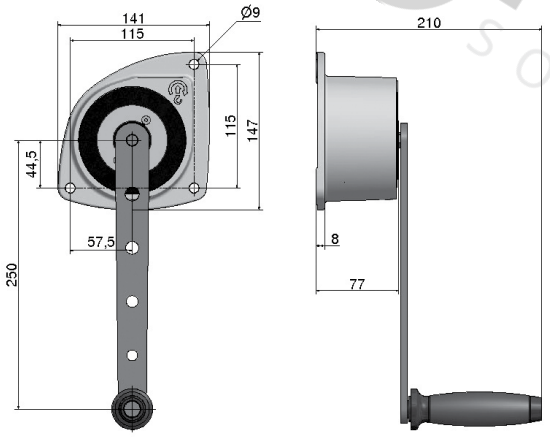

Manistor 100

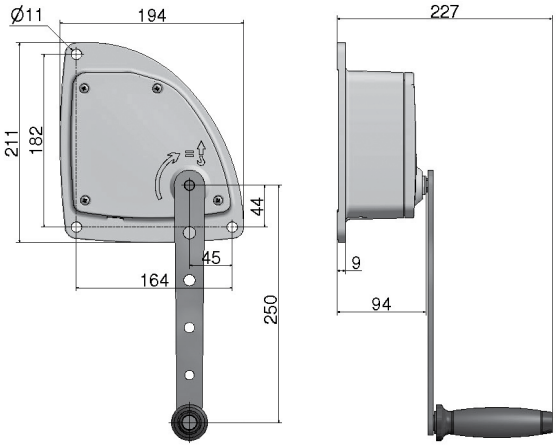

Manistor 200

Applications

- Sport arena, performance halls (scenery...), industry.



Lifting of a pump.



Lifting of an advertising banner.

Technical characteristics

References	MANISTOR 100	MANISTOR 200
Capacity top layer kg	**100**	**200**
Capacity 1st layer kg	150	300
Nb of layers	5	4
Maxi. drum capacity m	10	6.5
1st layer drum capacity m	1.5	1
Wire rope Ø mm	3	4
Lift per crank revolution mm	153	50
Maxi. crank effort kg	18	12
Weight (without wire rope) kg	1.9	3
Price €	**227**	**404**

The wire rope diameter corresponds to the capacity on the top layer with a safety coefficient of (about) 5 when lifting with non-rotating wire rope.

COMPLETE DATA SHEET ON huchez.com

PULLING HAND WINCHES

631.N



Pulling capacities from 470 to 2741 kg. Ratchet hand winches.

- Occasional use.
- Chassis in bichromated galvanised steel.
- Flat mounted.
- 3 fixation points.
- Fixed crank.
- Holding and disengaging ratchets.
- Heavy loads retarder brake (ref. 16N2F and 25N3F).

Options ▷ Wire rope (m/l or kit) and hook (see p. 86-90).

Applications

- Cable, nets... tensioning.
- Pulling on 0% slope or independently secured load.

Technical characteristics

References	3N1	5N1	7N1	9N1	16N2F	25N3F
Pulling capacity (0% slope) kg	**470**	**596**	**723**	**894**	**1556**	**2741**
Maxi. Drum capacity m	22	17	32	21	14	14
Wire rope Ø mm	3	5	5	6	7	8
Weight (without wire rope) kg	2	3	4.6	6	7.8	13.1
Price €	**69**	**93**	**151**	**183**	**545**	**713**

The wire rope diameter corresponds to the capacity on the top layer with a safety coefficient of (about) 3 when pulling with non-rotating wire rope.

Dimensions

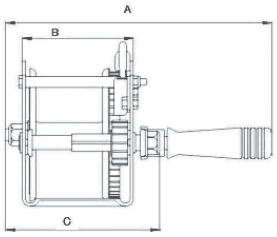

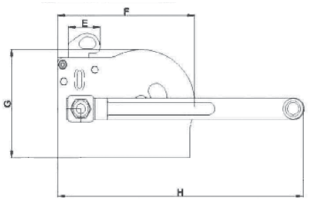

Models	3N1	5N1	7N1	9N1	16N2F	25N3F
A mm	230	240	242	270	290	345
C mm	130	140	142	165	175	230
G mm	100	127	166	171	171	190
H mm	200	240	240	253	312	348

PULLING HAND WINCHES

THB



Pulling capacity 4 t, up to 10 t holding. Hand gear winch.

- Daily use
- Rugged construction with steel chassis.
- Steel drum and shafts mounted on self lubricated bearings.
- Straight cut gears in high tensile steel.
- Hand wheel (on the right or the left).
- Holding ratchet. Lever-operated locking ratchet.
- Pedal brake acting directly on the hand wheel.

Options ▷ Wire rope (m/l) and hook (see p. 86-90).

Applications

- Docking.
- Mooring of barges between them for river navigation...
- Barge hauling.

Dimensions

Dimensions in mm.

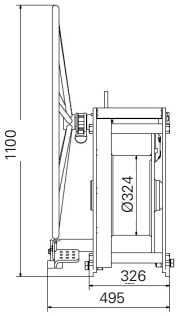

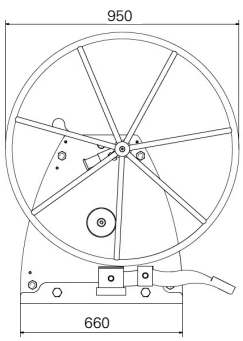

Technical characteristics

References	THB
Capacity top layer kg	**4 000**
Capacity 1st layer kg	5 100
Holding capacity kg	10 000
Nb of layers	4
Maxi. drum capacity m	46
1st layer drum capacity m	7.5
Wire rope Ø mm	16
Travel/hand wheel revolution mm	150
Weight (without wire rope) kg	250
Price €	**5 094**

The wire rope diameter corresponds to the capacity on the top layer with a safety coefficient of (about) 3 when pulling with non-rotating wire rope.

COMPLETE DATA SHEET ON huchez.com

PULLING HAND WINCHES
659

Pulling capacities from 600 kg to 10 t.
Pulling crab winches, gear type.

- Daily use.
- Rugged construction with steel chassis.
- Drum (steel or cast iron) and shafts mounted on self lubricated or bronze bearings.
- Straight cut gears in high tensile steel.
- 2 handles as standard.
- Two speeds. Free spooling (except for the 600 kg model).
- Manual band brake (lever or hand wheel).

Options
- Hand wheels.
- Marine Paint.
- Wire rope (m/l or kit) and hook (see p. 86-90).



Dimensions

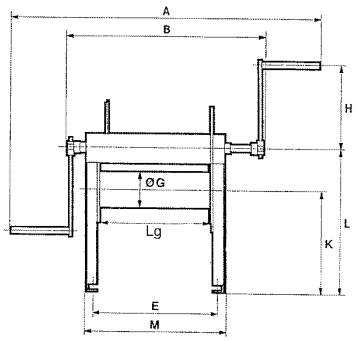

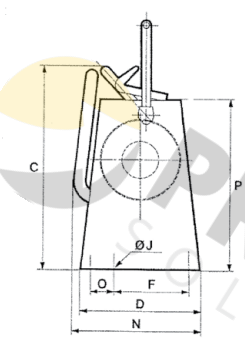

References	600	1500	2000	3000	5000	7500	10000
A mm	1 235	1 322	1 415	1 800	2 260	2 455	2 920
E mm	460	524	580	677	798	990	1 565
Ø G mm	133	133	168	168	245	324	355
H mm	360	360	360	480	406	406	406
L mm	605	680	660	707	775	900	882
M mm	515	580	645	745	880	1 080	1 665
P mm	645	705	720	780	850	960	1 000
Lg mm	400	450	500	600	710	900	1 100

Strong points

- Adjustable crank in lenght (models up to 3 t).



Models with hand wheel (option).

Applications

- Pulling vehicles, wagons...
- Door opening...
- Pulling grids on a dam.
- Operations requiring large wire rope capacities.



Pulling boats.



Mooring and moving of barges, boats...

Technical characteristics

References	600	1500	2000	3000	5000	7500	10000
Capacity top layer kg	**600**	**1 500**	**2 000**	**3 000**	**5 000**	**7 500**	**10 000**
Capacity 1st layer kg	900	2 000	2 900	4 100	7 500	11 000	On request
Nb of layers	8	4	5	4	5	6	7
Maxi. drum capacity m	346	112	169	138	223	403	561
1st layer drum capacity m	32	23	25	27	33	50	On request
Wire rope Ø mm	5	8	10	11.5	16	18	18
Travel/crank revolution mm	88.5	90	78	88	44	40	40
Weight (without wire rope) kg	70	85	110	170	360	550	1 100
Price €	**2 266**	**3 796**	**4 443**	**8 336**	**11 824**	**22 324**	**37 289**
Hand wheel - opt.	**On request**						
Marine paint- opt.	**On request**						

The wire rope diameter corresponds to the capacity on the top layer with a safety coefficient of (about) 3 when pulling with non-rotating wire rope.

PULLEY-MAN PORTABLE MINI WINCH

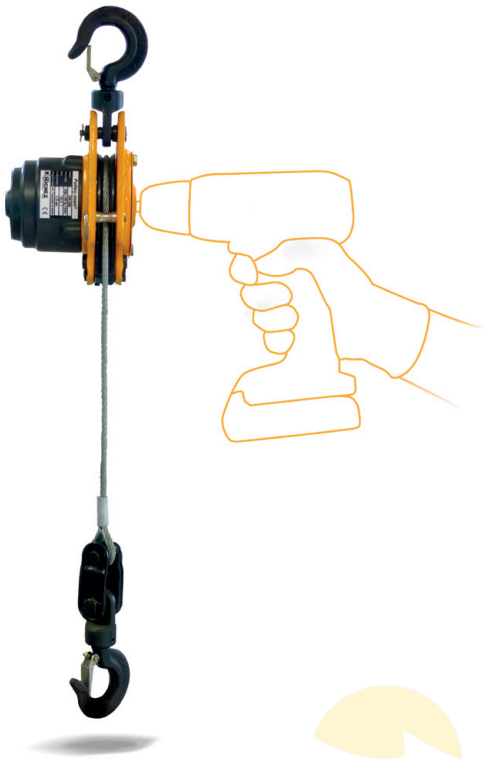

Capacity 300 kg (up to 1500 kg in traction/hauling on wheels depending on the slope)
PULLEY-MAN portable mini winch to use with all screwdrivers / drills, cordless or not.

- Occasional use.
- Machined cast iron frame.
- Automatic system to maintain the load (patented self-braking brake reducer).
- Rotating suspension hook.
- Supplied with 12 m of aviation type galvanized wire rope Ø 4.76 mm and hook.
- Wire rope length :
  - Unlimited in pulling.
  - Limited to 50 m in lifting (beyond 12 m, 10 % lifting capacity loss every 10 m sections).

Options
- Pulley.
- Wall support.
- Single case kit (case, winch)
- Complete case kit (case, winch, drill, charger, sling, shackles)
- Wire rope kit with loop (20, 30, 40 or 50 m, extra m).

Strong points



Complete case kit (option).

- Small size, light weight.
- Works in all positions.



Various available options.

- Easy installation thanks to its suspension hook.



Wall support enabling the wire rope to go up or down.



Pulley to double the load (option):
- Lifting capacity : 600 kg on 2 falls,
- Hauling capacity for load on wheels : from 200 to 3000 kg depending on the slope on 2 falls.

Fastening methods

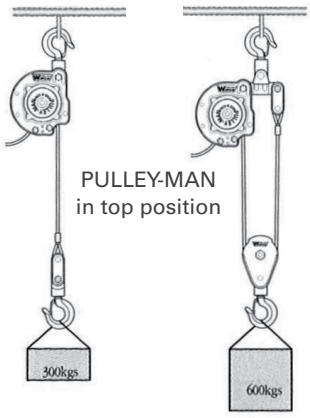

On 1 fall — On 2 falls

Winch in top

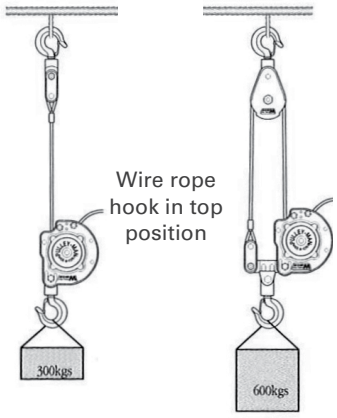

On 1 fall — On 2 falls

Winch in the bottom

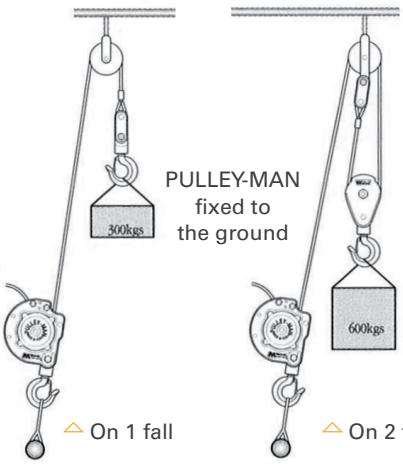

On 1 fall — On 2 falls

Winch in middle

COMPLETE DATA SHEET ON huchez.com
PROLIFT SOLUTIONS

Dimensions

Dimensions in mm.

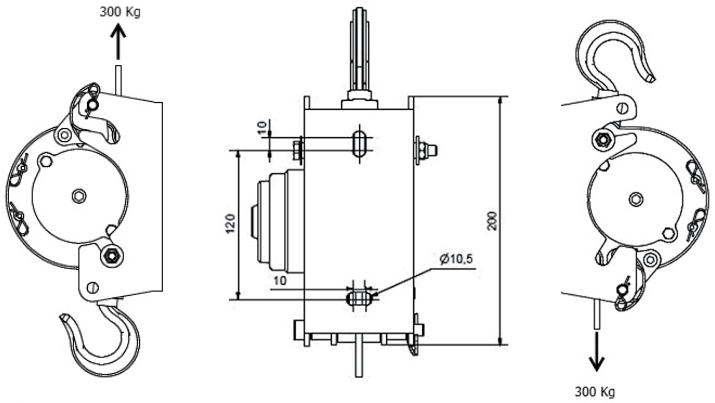

Wall support in option.

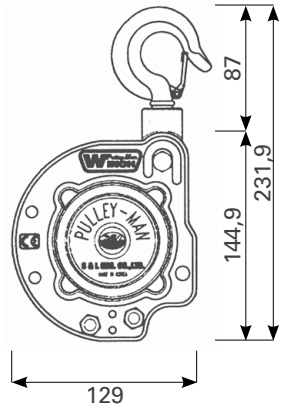

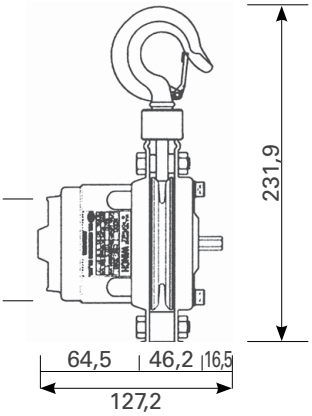

Pulley-Man

Applications



Lifting various loads (equipment...) on a construction site.

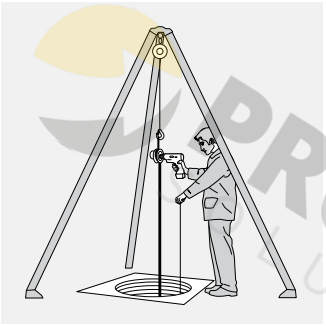

Load lifting above a well.



Heavy load handling.



Towing a vehicle.

Light works: maintenance, repair, installation, DIY, quad, farming, first aid...

Technical characteristics

References	Pulley-Man
Capacity kg	**300**
Pulling capacity for load on wheels kg (with slope of 6°/12°/16°/27°/35°)	1500 / 975 / 825 / 585 / 450
Wire rope Ø mm	4.76
Weight (with 12 m wire rope and hook) kg	7.5
Price €	**509**
Pulley - Opt.	**140**
Wall support - Opt.	**87**
20 m wire rope kit with loop - Opt.	**113**
30 m wire rope kit with loop - Opt.	**134**
40 m wire rope kit with loop - Opt.	**153**
50 m wire rope kit with loop - Opt.	**190**
Wire rope kit with loop, additional meter. - Opt.	**6**

Single case kit (case, winch)	**616**
Complete case kit (case, winch, drill, charger, sling, schakles)	**2 097**

MOTORBOX©

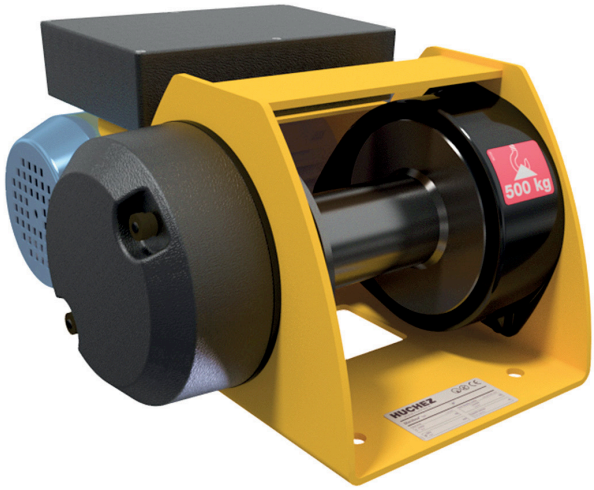

Capacities from 150 to 500 kg.
Electric winches designed for simple applications, ideal for replacing a manual winch.

- FEM 1Dm - Occasional use.
- Drum and frame in mechanically welded, shot-blasted and painted steel.
- Greased reducer with helical gears.
- Asynchronous motor. Class F. IP 44 protection (model 150 kg) and IP 54 (models 300 and 500 kg).
- Automatic lack of current brake.
- Single phase power 230V-50Hz.
- Power suitable for any installation.
- Limit switches included.
- Direct control (CD) only for use protected from the weather.
- Very low voltage control (BT) ensuring user protection against electrical risks.
- 3 buttons pendant control (Up - Down- Emergency Stop), not removable (2 m long control cable).

Options Wire rope (m/l or kit) and hook (see p. 86-90).
Tarpaulin cover (see p. 70).

NEW



AGON 300 kg
Motorised lifting equipment for sport and cultural facilities : consult us.

Strong points



Prevention of musculoskeletal disorders. The motorized manual winch: the ideal solution to replace your manual winch at a reasonable cost!



Fixations identical to the ones of the manual winches MANIBOX GR 150, 300 or 500 to facilitate replacement.

Applications



Lifting of basketball blackboard and other retractable sport equipment, room partition, billboards...

Video available on our YOUTUBE channel.

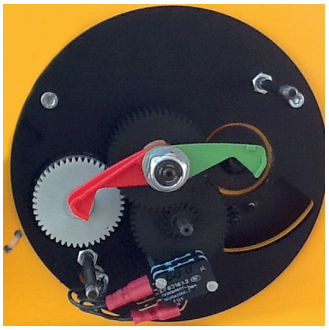

Easy to adjust and reliable limit switch specially developed by HUCHEZ.



MOTORBOX 150 : high compactness.

COMPLETE DATA SHEET ON huchez.com

Dimensions

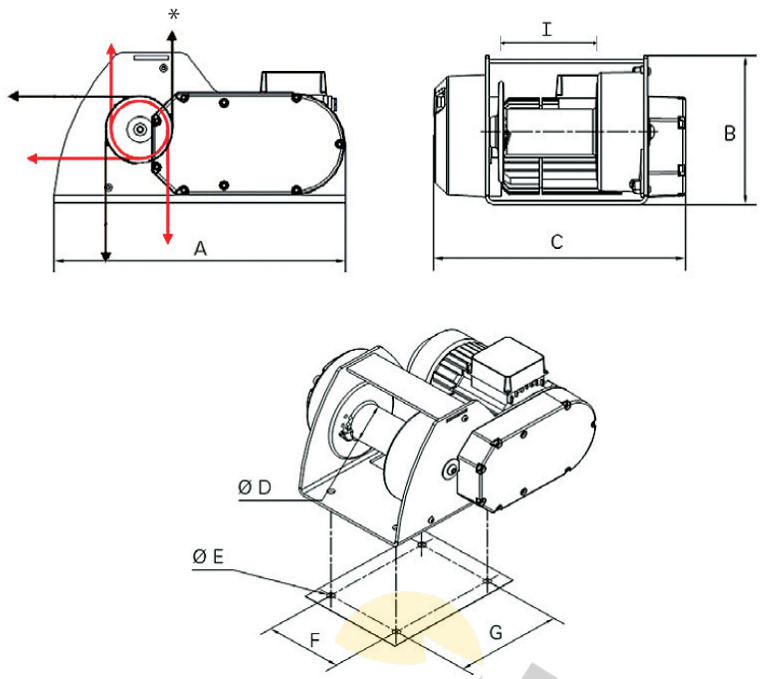

— Motorbox 150 kg (* valid only in Direct Control CD version).
— Motorbox 300/500 kg.

Models	MOTORBOX 150 CD	MOTORBOX 300 CD	MOTORBOX 500 CD	MOTORBOX 150 BT	MOTORBOX 300 BT	MOTORBOX 500 BT
A mm	310	390	390	340	424	424
B mm	179	205	205	210	216	216
C mm	281	341	341	281	341	341
Ø D mm	54	63,5	63,5	54	63,5	63,5
Ø E mm	9	13	13	9	13	13
F mm	114	144	144	114	144	144
G mm	154	200	200	154	200	200
I mm	105	124	124	105	124	124

Technical characteristics

References	MOTORBOX 150 CD	MOTORBOX 300 CD	MOTORBOX 500 CD	MOTORBOX 150 BT	MOTORBOX 300 BT	MOTORBOX 500 BT
Capacity top layer kg	**150**	**300**	**500**	**150**	**300**	**500**
Capacity 1st layer kg	150	300	500	150	300	500
Nb of layers	3	3	3	3	3	3
Maxi. Drum capacity m	15	16	13.5	15	16	13.5
1st layer drum capacity m	4	4	4	4	4	4
Wire rope Ø mm	4	5	6	4	5	6
Speed m/min	7	5.9	3.6	7	5.9	3.6
FEM	1Dm	1Dm	1Dm	1Dm	1Dm	1Dm
Motor kW	0.25	0.37	0.37	0.25	0.37	0.37
Power	1 Ph-230V	1 Ph-230V	1 Ph-230V	1 Ph-230V	1 Ph-230V	1 Ph-230V
Weight (without wire rope) kg	14	27	27	16	29	29
Price €	**1 139**	**1 271**	**1 271**	**1 463**	**1 563**	**1 563**

The wire rope diameter corresponds to the capacity on the top layer with a safety coefficient of (about) 5 when lifting with non-rotating wire rope.

Applications

- Maintenance (chandeliers,...)
- Handling solution for billboards, rooms partitions, basketball blackboard... (AGON 300 kg: consult us.).



Opening a hatch.

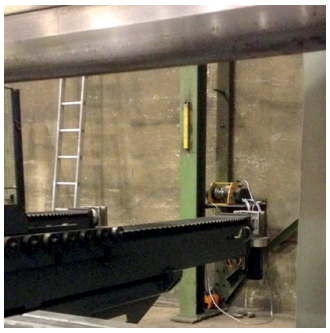

Pulling a plate on a press.



Manoeuvring hatches, doors, etc.



MOTORBOX use in the industry.

PRIMO



Primo 300 kg

Capacities from 300 to 2000 kg.
Electric winches designed for simple applications, benefiting from the same quality requirements than the TRBoxter range.

- FEM 1Cm / 1Bm - Occasional or moderate use, depending on the model.
- Drum and frame in mechanically welded, shot-blasted and painted steel.
- Greased reducer with helical gears.
- Asynchronous motor. Class F. IP 54 protection.
- Automatic lack of current brake.
- Single phase power 230V-50Hz or three phase 400V-50Hz (3 Ph-230V on request) depending on model.
- Electronic load limiter (from 1000 kg) and limit switch included.
- Very low voltage control (BT) ensuring user protection against electrical risks.
- 3 buttons pendant control (Up - Down- Emergency Stop), not removable (3 m long control cable).

Options
- Wire rope (m/l or kit) and hook (see p. 86-90).
- Grooved drum.
- Rope press roller.
- Tarpaulin cover (see p. 70).

Strong points



PRIMO 2000 kg model.



Easy to adjust and reliable limit switch specially developed by HUCHEZ.



Grooved drum (option).

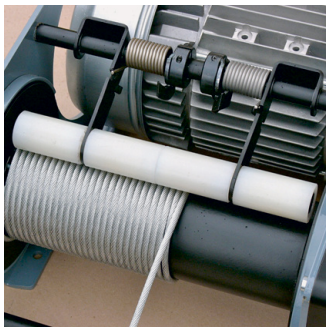

Rope press roller (option).

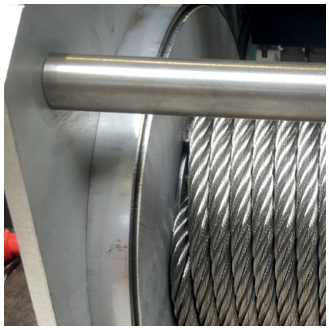

Highly reliable cable clamp not requiring special tool with rope winding direction guide.

See the following pages : Stainless steel range p.42

COMPLETE DATA SHEET ON huchez.com

Dimensions

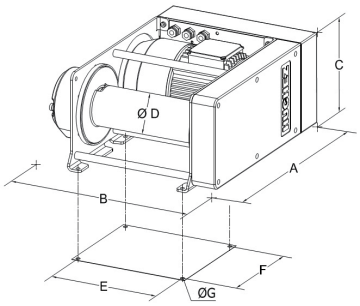

For models 300 and 500 kg.

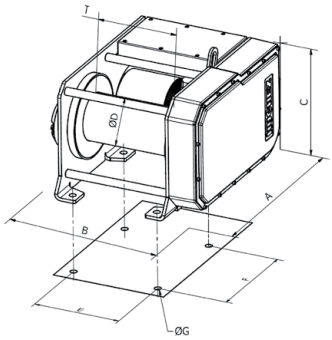

For models 990 and 2000 kg.

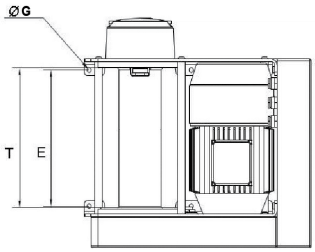

Models	PRIMO BT 300 KG	PRIMO BT 500 KG	PRIMO BT 990 KG	PRIMO BT 2000 KG
A mm	476	476	565	610
B mm	422	430	500	565
C mm	231	241	326	390
Ø D mm	89	95	133	152
E mm	250	250	260	292
F mm	214 (1)	214 (1)	280	350
Ø G mm	9	9	17	22
T mm	257	257	280	312

1) 2 fixation holes are available at half the dimensions, i.e. 107 mm.
Height C can vary from one model to the other depending of the type of motor terminal available: the indicated height is the maximum height.

Applications

- Leisure boat hauling.
- Handling of swimming pool roofs, goods-lifts...

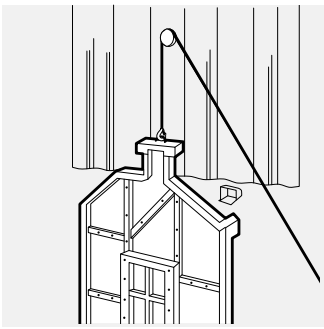

Handling scenery.



Pulling concrete formwork on a construction site.

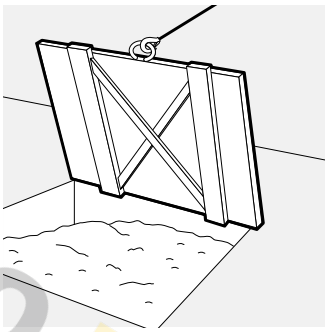

Lifting hatches.



Relocation of the settling tank covers in a water treatment plant.



Lifting of a basket in a zoo.



Maintenance (chandeliers,...)...

Technical characteristics

References	PRIMO 301 BT	PRIMO 303 BT	PRIMO 501 BT	PRIMO 503 BT	PRIMO 991 BT	PRIMO 993 BT	PRIMO 2003 BT
Capacity top layer kg	**300**	**300**	**500**	**500**	**990**	**990**	**2 000**
Capacity 1st layer kg	360	360	630	630	1 300	1 300	2 500
Nb of layers	3	3	3	3	4	4	3
Maxi. Drum capacity m	48	48	38	38	68	68	45
1st layer drum capacity m	13	13	10	10	13	13	12
Wire rope Ø mm	5	5	7	7	8	8	11.5
Speed m/min	9.1	9.1	11	11	5.2	5.2	5.2
FEM	1Bm	1Bm	1Cm	1Cm	1Bm	1Bm	1Cm
Motor kW	0.75	0.75	1.1	1.1	1.1	1.1	2.2
Power	1 Ph - 230V	3 Ph - 400V	1 Ph - 230V	3 Ph - 400V	1 Ph - 230V	3 Ph - 400V	3 Ph - 400V
Weight (without wire rope) kg	35	35	40	40	88	90	160
Price €	**2 827**	**2 827**	**3 056**	**3 056**	**4 986**	**4 986**	**6 083**

The wire rope diameter corresponds to the capacity on the top layer with a safety coefficient of (about) 5 when lifting with non-rotating wire rope.

COMPLETE DATA SHEET ON huchez.com

TRBOXTER

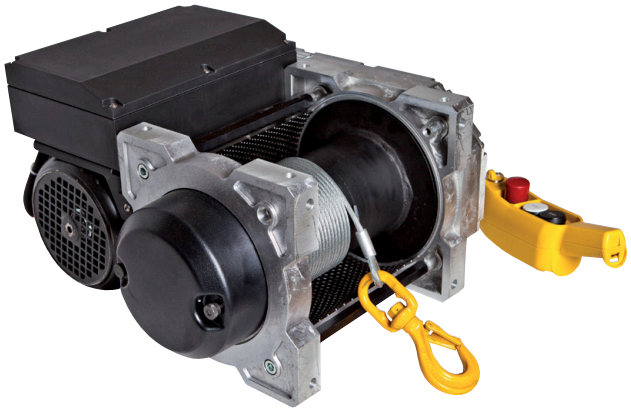

TRBoxter 500 kg, low voltage control, 1 speed model (BT).



TRBoxter 1500 kg, low voltage control, variable speed model (VV).

Capacities from 250 to 1500 kg. Multifunctional compact electric winches with a high duty factor.

- FEM 1Cm / 1Bm / 1Am - Occasional, moderate or accentuated use, depending on model.
- Aluminum housing.
- Mechano-welded steel drum.
- Greased reducer with helical gears.
- Asynchronous motor. IP 54 protection.
- Automatic lack of current brake.
- Single phase power 230V-50Hz or three phase 400V-50Hz (other tension on request) depending on model.
- Very low voltage control (BT) ensuring user protection against electrical risks : single speed models (BT) or speed variation model (VV). In addition to the advantages of very low voltage, the VV control allows variation of the winding speed, smooth starts and stops.
- Thermal circuit breaker.
- 3 buttons pendant control (Up - Down- Emergency Stop):
  - Removable (3 m long control cable) on BT models.
  - Not removable (3 m long control cable) on VV models.

Options
- Wire rope (m/l or kit) and hook (see p. 86-90).
- Limit switch.
- Rope press roller.
- Electronic load limiter.
- Grooved drum.
- Radio control.
- Other options, see p. 64-70.

Strong points

- Many fixations possibilities (on trolley see p. 54, on ceiling...).

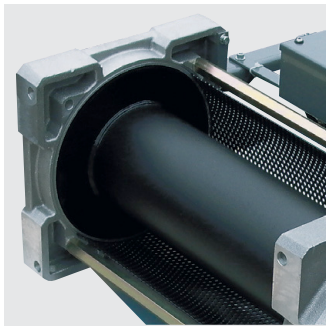

Long drum models : T drum length and wire rope capacity x 1.5.



Drum protected by an orientable perforated metal sheet. Wide flanges for large cable capacity.

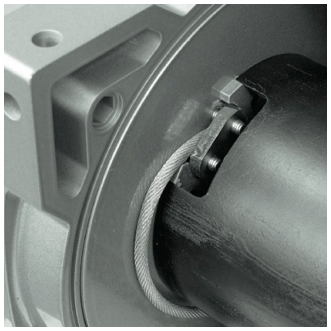

Highly reliable cable clamp not requiring special tool with rope winding direction guide. Nut cage for easy attachment.



Reliability of electric and electronic components.

See the following pages : Stainless steel range p. 44
High lifting range p. 52

COMPLETE DATA SHEET ON huchez.com
PROLIFT SOLUTIONS

Rope outlets

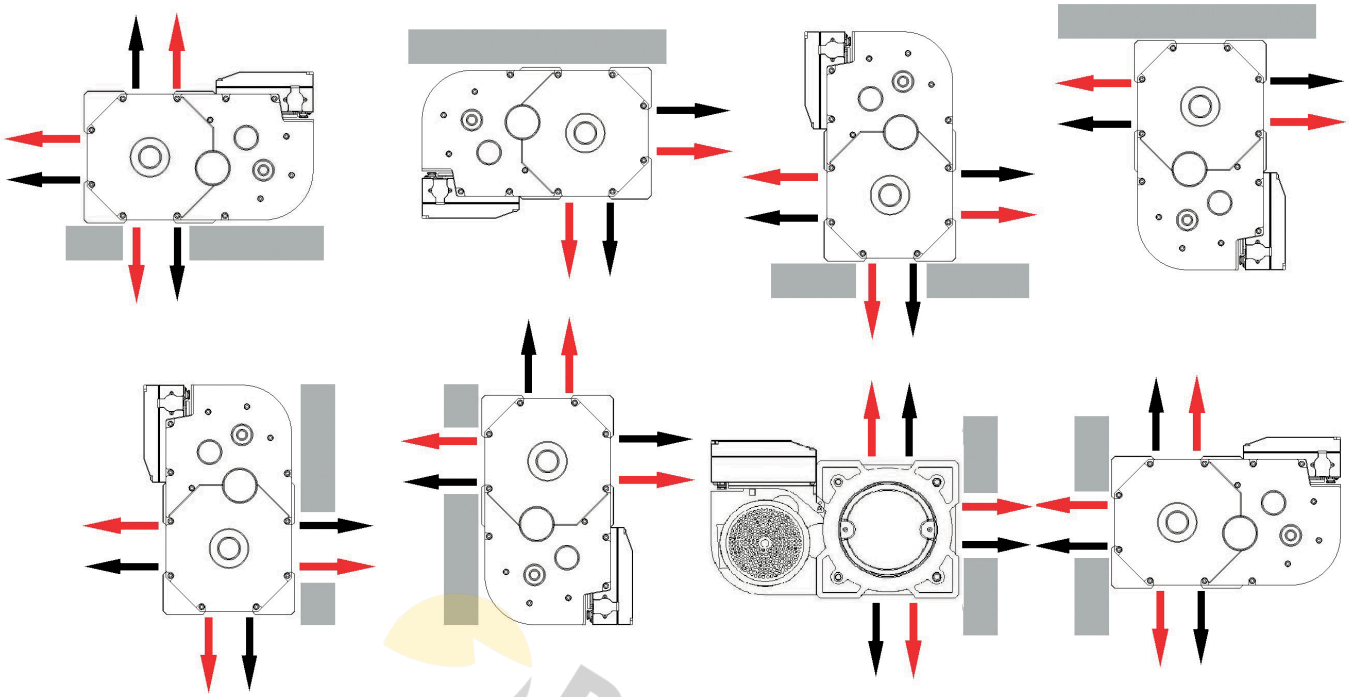

Standard outlet, right hand lay rope.

Non standard outlet, left hand lay rope.

Applications

- Boat hauling
- Opening of hatches, doors...
- Installation and exit of parts in furnace.



Goods lift.



On translation bracket.



Ceiling mounting.



Shows.



Chandelier handling.



Moving a trolley on a conveyor during maintenance operation.



Loading of a barge.

TRBOXTER

Dimensions

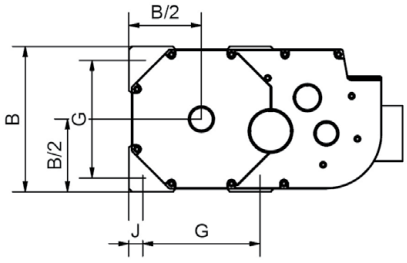

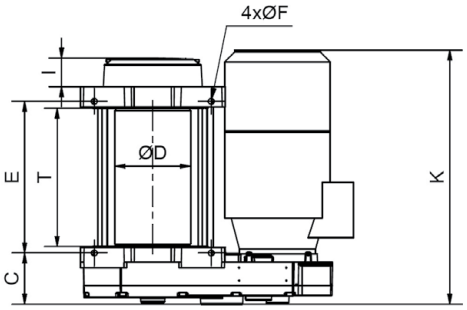

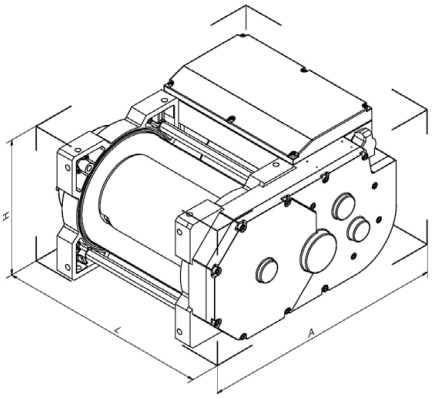

Models		1 speed models				Variation speed models			
		TRBOXTER 250 to 500		TRBOXTER 600 to 1500		TRBOXTER 250 to 500		TRBOXTER 600 to 1500	
		Standard	Long	Standard	Long	Standard	Long	Standard	Long
A mm	0.75 kW Motor	451	451	535.5	535.5	475	475	574	574
	1.1 kW Motor	462	462	543	543	475	475	574	574
	1.5 kW Motor	-	-	541	541	-	-	574	574
	2.2 kW Motor	473	473	554	554	475	475	574	574
	3 kW Motor	-	-	558	558	477	475	574	574
	4 kW Motor	-	-	558	558	-	-	574	574
Ø D mm		121	121	159	159	121	121	159	159
E mm		255	255	318	463	255	370	318	463
Ø F mm		10.5	10.5	12.5	12.5	10.5	10.5	12.5	12.5
G mm		197	197	246	246	197	197	246	246
H mm	0.75 kW Motor	284.5	284.5	332.5	332.5	345	345	391	391
	1.1 kW Motor	284.5	284.5	332.5	332.5	345	345	391	391
	1.5 kW Motor	-	-	332,5	332,5	-	-	391	391
	2.2 kW Motor	306.5	306.5	332.5	332.5	345	345	391	391
	3 kW Motor	-	-	332.5	332.5	345	345	391	391
	4 kW Motor	-	-	332.5	332.5	-	-	449	449
K mm		488	471	495.5	495.5	488	471	495.5	495.5
L (without / with limit switch) mm	0.75 kW Motor	356/421	468/533	456/516	601/661	356/421	468/533	456/516	601/661
	1.1 kW Motor	356/421	468/533	456/516	601/661	356/421	468/533	456/516	601/661
	1.5 kW Motor	-	-	456/516	601/661	-	-	456/516	601/661
	2.2 kW Motor	488/488	468/533	507/516	601/661	488/488	468/533	495,5/516	601/661
	3 kW Motor	-	-	511/516	601/661	488/488	468/533	511/516	601/661
	4 kW Motor	-	-	533/533	601/661	-	-	533/533	601/661
T mm		230	345	290	435	230	345	290	435

PRO LIFT SOLUTIONS

COMPLETE DATA SHEET ON huchez.com

Technical characteristics TRBoxter

Very low voltage control, 1 speed models (BT)

References	TRBOXTER 251			TRBOXTER 253				TRBOXTER 351	
	BT9	BT14	BT21	BT9	BT14	BT21	BT43	BT9	BT14
Capacity top layer kg	**250**	**250**	**250**	**250**	**250**	**250**	**250**	**350**	**350**
Capacity 1st layer kg	290	290	290	290	290	290	290	400	400
Nb of layers	3	3	3	3	3	3	3	3	3
Maxi. Drum capacity m	56	56	56	56	56	56	56	56	56
1st layer drum capacity m	16	16	16	16	16	16	16	16	16
Wire rope Ø mm	5	5	5	5	5	5	5	5	5
Speed m/min	9.4	15.4	23	9.4	15.4	23	46.6	9.4	15.4
FEM	1Am	1Am	1Am	1Am	1Am	1Am	1Am	1Bm	1Bm
Motor kW	0.75	0.75	1.1	0.75	0.75	1.1	2.2	0.75	1.1
Power	1 Ph 230V	1 Ph 230V	1 Ph 230V	3 Ph 400V	3 Ph 400V	3 Ph 400V	3 Ph 400V	1 Ph 230V	1 Ph 230V
Weight (without wire rope) kg	49	49	51	49	49	51	59	49	51
Price €									
Standard drum model	**3 640**	**3 640**	**3 640**	**3 640**	**3 640**	**3 640**	**4 020**	**3 640**	**3 640**
Long drum model	**-**	**-**	**3 931**	**3 931**	**3 931**	**3 931**	**4 311**	**-**	**-**
Limit switch - Opt.	**438**	**438**	**438**	**438**	**438**	**438**	**438**	**438**	**438**
Electronic load limiter - Opt.	**558**	**558**	**558**	**558**	**558**	**558**	**558**	**558**	**558**

References	TRBOXTER 353			TRBOXTER 501	TRBOXTER 503		
	BT9	BT14	BT26	BT11	BT4	BT11	BT21
Capacity top layer kg	**350**	**350**	**350**	**500**	**500**	**500**	**500**
Capacity 1st layer kg	400	400	400	600	600	600	600
Nb of layers	3	3	3	3	3	3	3
Maxi. Drum capacity m	56	56	56	42	42	42	42
1st layer drum capacity m	16	16	16	12	12	12	12
Wire rope Ø mm	5	5	5	7	7	7	7
Speed m/min	9.4	15.4	29.8	12.2	4.9	12.2	24.2
FEM	1Bm	1Bm	1Bm	1Bm	1Bm	1Bm	1Bm
Motor kW	0.75	1.1	2.2	1.1	0.75	1.1	2.2
Power	3 Ph 400V	3 Ph 400V	3 Ph 400V	1 Ph 230V	3 Ph 400V	3 Ph 400V	3 Ph 400V
Weight (without wire rope) kg	49	51	59	51	49	51	59
Price €							
Standard drum model	**3 640**	**3 640**	**4 107**	**3 640**	**3 902**	**3 640**	**4 107**
Long drum model	**3 931**	**3 931**	**4 397**	**-**	**4 194**	**3 931**	**4 397**
Limit switch - Opt.	**438**	**438**	**438**	**438**	**438**	**438**	**438**
Electronic load limiter - Opt.	**558**	**558**	**558**	**558**	**558**	**558**	**558**

References	TRBOXTER 603					TRBOXTER 803			
	BT5	BT10	BT15	BT20	BT30	BT5	BT10	BT13	BT17
Capacity top layer kg	**600**	**600**	**600**	**600**	**600**	**800**	**800**	**800**	**800**
Capacity 1st layer kg	750	750	750	750	750	950	950	950	950
Nb of layers	4	4	4	4	4	3	3	3	3
Maxi. Drum capacity m	93	93	93	93	93	59	59	59	59
1st layer drum capacity m	19	19	19	19	19	16.5	16.5	16.5	16.5
Wire rope Ø mm	7	7	7	7	7	8	8	8	8
Speed m/min	6	11	18.6	22.5	31.9	5.2	10.3	14.3	17.8
FEM	1Am	1Am	1Am	1Bm	1Bm	1Bm	1Bm	1Bm	1Bm
Motor kW	0.75	1.1	2.2	3	4	1.1	2.2	3	4
Power	3 Ph 400V	3 Ph 400V	3 Ph 400V	3 Ph 400V	3 Ph 400V	3 Ph 400V	3 Ph 400V	3 Ph 400V	3 Ph 400V
Weight (without wire rope) kg	88	101	100	104	107	92	100	104	107
Price €									
Standard drum model	**5 287**	**5 287**	**5 361**	**5 558**	**5 893**	**5 517**	**5 591**	**5 785**	**6 118**
Long drum model	**5 806**	**5 652**	**5 728**	**-**	**6 259**	**5 883**	**5 957**	**-**	**6 486**
Limit switch - Opt.	**438**	**438**	**438**	**438**	**438**	**438**	**438**	**438**	**438**
Electronic load limiter - Opt.	**558**	**558**	**558**	**558**	**558**	**558**	**558**	**558**	**558**

The wire rope diameter corresponds to the capacity on the top layer with a safety coefficient of (about) 5 when lifting with non-rotating wire rope. Long drum models : drum length and wire rope capacity x 1.5.

TRBOXTER

References	TRBOXTER 993				TRBOXTER 1503	
	BT5	BT10	BT13	BT17	BT4	BT9
Capacity top layer kg	**990**	**990**	**990**	**990**	**1 500**	**1 500**
Capacity 1st layer kg	1 200	1 100	990	990	1 500	1 500
Nb of layers	3	2	1	1	1	1
Maxi. Drum capacity m	53	34	14.5	14.5	11.5	11.5
1st layer drum capacity m	14.5	14.5	14.5	14.5	11.5	11.5
Wire rope Ø mm	9	9	9	9	11.5	11.5
Speed m/min	5.3	10.6	12.1	15.1	4.4	8.8
FEM	1Bm	1Bm	1Bm	1Cm	1Bm	1Cm
Motor kW	1.1	2.2	3	4	1.5	3
Power	3 Ph - 400V	3 Ph - 400V	3 Ph - 400V	3 Ph - 400V	3 Ph - 400V	3 Ph - 400V
Weight (without wire rope) kg	92	100	104	107	101	104
Price €						
Standard drum model	**5 517**	**5 591**	**5 785**	**6 118**	**5 591**	**5 785**
Long drum model	**5 883**	**5 957**	**6 153**	**6 486**	**5 957**	**6 153**
Limit switch - Opt.	**438**	**438**	**438**	**438**	**438**	**438**
Electronic load limiter - Opt.	**558**	**558**	**558**	**558**	**558**	**558**

Technical characteristics TRBoxter

Commande très basse tension, modèles à variateur de vitesse (VV)

References	TRBOXTER 251				TRBOXTER 253				
	VV9	VV14	VV21	VV43	VV9	VV14	VV21	VV43	VV60
Capacity top layer kg	**250**	**250**	**250**	**250**	**250**	**250**	**250**	**250**	**250**
Capacity 1st layer kg	290	290	290	290	290	290	290	290	290
Nb of layers	3	3	3	3	3	3	3	3	3
Maxi. Drum capacity m	56	56	56	56	56	56	56	56	56
1st layer drum capacity m	16	16	16	16	16	16	16	16	16
Wire rope Ø mm	5	5	5	5	5	5	5	5	5
Speed m/min	0.9-9	1.4-14	2.1-21	4.3-43	0.9-9	1.4-14	2.1-21	4.3-43	6.0-60
FEM	1Am	1Am	1Am	1Am	1Am	1Am	1Am	1Am	1Am
Motor kW	0.75	0.75	1.1	2.2	0.75	0.75	1.1	2.2	3
Power	1 Ph 230V	1 Ph 230V	1 Ph 230V	1 Ph 230V	3 Ph 400V	3 Ph 400V	3 Ph 400V	3 Ph 400V	3 Ph 400V
Weight (without wire rope) kg	50	50	54	62	50	50	54	62	66
Price €									
Standard drum model	**4 002**	**4 002**	**4 002**	**4 494**	**4 335**	**4 335**	**4 335**	**4 832**	**6 059**
Long drum model	**4 293**	**4 293**	**4 293**	**4 787**	**4 628**	**4 628**	**4 628**	**5 125**	**6 354**
Limit switch - Opt.	**438**	**438**	**438**	**438**	**438**	**438**	**438**	**438**	**438**
Electronic load limiter - Opt.	**558**	**558**	**558**	**558**	**558**	**558**	**558**	**558**	**558**

References	TRBOXTER 351			TRBOXTER 353				TRBOXTER 501		
	VV9	VV14	VV26	VV9	VV14	VV26	VV42	VV4	VV11	VV21
Capacity top layer kg	**350**	**350**	**350**	**350**	**350**	**350**	**350**	**500**	**500**	**500**
Capacity 1st layer kg	400	400	400	400	400	400	400	600	600	600
Nb of layers	3	3	3	3	3	3	3	3	3	3
Maxi. Drum capacity m	56	56	56	56	56	56	56	42	42	42
1st layer drum capacity m	16	16	16	16	16	16	16	12	12	12
Wire rope Ø mm	5	5	5	5	5	5	5	7	7	7
Speed m/min	0.9-9	1.4-14	3.0-30	0.9-9	1.4-14	3.0-30	4.2-42	0.5-5	1.1-11	2.2-22
FEM	1Bm	1Bm	1Bm	1Bm	1Bm	1Bm	1Bm	1Bm	1Bm	1Bm
Motor kW	0.75	1.1	2.2	0.75	1.1	2.2	3	0.75	1.1	2.2
Power	1 Ph 230V	1 Ph 230V	1 Ph 230V	3 Ph 400V	3 Ph 400V	3 Ph 400V	3 Ph 400V	1 Ph 230V	1 Ph 230V	1 Ph 230V
Weight (without wire rope) kg	50	54	62	50	54	62	66	50	54	62
Price €										
Standard drum model	**4002**	**4002**	**4583**	**4335**	**4335**	**4916**	**6147**	**4597**	**4002**	**4583**
Long drum model	**4293**	**4293**	**4874**	**4628**	**4628**	**5211**	**6440**	**-**	**4293**	**4874**
Limit switch - Opt.	**438**	**438**	**438**	**438**	**438**	**438**	**438**	**438**	**438**	**438**
Electronic load limiter - Opt.	**558**	**558**	**558**	**558**	**558**	**558**	**558**	**558**	**558**	**558**

The wire rope diameter corresponds to the capacity on the top layer with a safety coefficient of (about) 5 when lifting with non-rotating wire rope. Long drum models : drum length and wire rope capacity x 1.5.

COMPLETE DATA SHEET ON huchez.com

References	TRBOXTER 503				TRBOXTER 601		TRBOXTER 603				
	VV4	VV11	VV21	VV32	VV5	VV10	VV5	VV10	VV15	VV20	VV30
Capacity top layer kg	**500**	**500**	**500**	**500**	**600**	**600**	**600**	**600**	**600**	**600**	**600**
Capacity 1st layer kg	600	600	600	600	750	750	750	750	750	750	750
Nb of layers	3	3	3	3	4	4	4	4	4	4	4
Maxi. Drum capacity m	42	42	42	42	93	93	93	93	93	93	93
1st layer drum capacity m	12	12	12	12	19	19	19	19	19	19	19
Wire rope Ø mm	7	7	7	7	7	7	7	7	7	7	7
Speed m/min	0.5-5	1.1-11	2.2-22	3.2-32	0.6-6	1.1-11	0.6-6	1.1-11	1.9-19	2.2-22	3.2-32
FEM	1Bm	1Bm	1Bm	1Bm	1Am	1Am	1Am	1Am	1Am	1Am	1Am
Motor kW	0.75	1.1	2.2	3	0.75	1.5	0.75	1.5	2.2	3	4
Power	3 Ph 400V	3 Ph 400V	3 Ph 400V	3 Ph 400V	1 Ph 230V	1 Ph 230V	3 Ph 400V	3 Ph 400V	3 Ph 400V	3 Ph 400V	3 Ph 400V
Weight (without wire rope) kg	50	54	62	66	88	101	88	101	100	104	107
Price €											
Standard drum model	**4 597**	**4 335**	**4 916**	**6 147**	**5 816**	**5 816**	**6 094**	**6 094**	**6 477**	**6 755**	**7 145**
Long drum model	**4 890**	**4 628**	**5 211**	**6 440**	**6 170**	**6 170**	**-**	**6 449**	**6 831**	**-**	**7 501**
Limit switch - Opt.	**438**	**438**	**438**	**438**	**438**	**438**	**438**	**438**	**438**	**438**	**438**
Electronic load limiter - Opt.	**558**	**558**	**558**	**558**	**558**	**558**	**558**	**558**	**558**	**558**	**558**

References	TRBOXTER 801	TRBOXTER 803				TRBOXTER 991
	VV5	VV5	VV10	VV13	VV17	VV5
Capacity top layer kg	**800**	**800**	**800**	**800**	**800**	**990**
Capacity 1st layer kg	950	950	950	950	950	1 200
Nb of layers	3	3	3	3	3	3
Maxi. Drum capacity m	59	59	59	59	59	53
1st layer drum capacity m	16.5	16.5	16.5	16.5	16.5	14.5
Wire rope Ø mm	8	8	8	8	8	9
Speed m/min	0.5-5	0.5-5	1.0-10	1.4-14	1.7-17	0.5-5
FEM	1Bm	1Bm	1Bm	1Bm	1Cm	1Bm
Motor kW	1.1	1.1	2.2	3	4	1.1
Power	1 Ph - 230V	3 Ph - 400V	3 Ph - 400V	3 Ph - 400V	3 Ph - 400V	1 Ph - 230V
Weight (without wire rope) kg	92	92	100	104	107	92
Price €						
Standard drum model	**6 047**	**6 325**	**6 704**	**6 982**	**7 376**	**6 047**
Long drum model	**6 400**	**6 678**	**7 061**	**-**	**7 728**	**6 400**
Limit switch - Opt.	**438**	**438**	**438**	**438**	**438**	**438**
Electronic load limiter - Opt.	**558**	**558**	**558**	**558**	**558**	**558**

References	TRBOXTER 993				TRBOXTER 1501	TRBOXTER 1503	
	VV5	VV10	VV13	VV17	VV4	VV4	VV9
Capacity top layer kg	**990**	**990**	**990**	**990**	**1 500**	**1 500**	**1 500**
Capacity 1st layer kg	1 200	1 100	990	990	1 500	1 500	1 500
Nb of layers	3	2	1	1	1	1	1
Maxi. Drum capacity m	53	34	14.5	14.5	11.5	11.5	11.5
1st layer drum capacity m	14.5	14.5	14.5	14.5	11.5	11.5	11.5
Wire rope Ø mm	9	9	9	9	11.5	11.5	11.5
Speed m/min	0.5-5	1-10	1.2-12	1.5-15	0.4-4	0.4-4	0.9-9
FEM	1Bm	1Bm	1Bm	1Cm	1Bm	1Bm	1Cm
Motor kW	1.1	2.2	3	4	1.5	1.5	3
Power	3 Ph 400V	3 Ph 400V	3 Ph 400V	3 Ph 400V	1 Ph 230V	3 Ph 400V	3 Ph 400V
Weight (without wire rope) kg	92	100	104	107	101	101	104
Price €							
Standard drum model	**6 325**	**6 704**	**6 982**	**7 376**	**6 398**	**6 398**	**6 982**
Long drum model	**6 678**	**7 061**	**7 338**	**7 728**	**6 678**	**6 678**	**7 338**
Limit switch - Opt.	**438**	**438**	**438**	**438**	**438**	**438**	**438**
Electronic load limiter - Opt.	**558**	**558**	**558**	**558**	**558**	**558**	**558**

The wire rope diameter corresponds to the capacity on the top layer with a safety coefficient of (about) 5 when lifting with non-rotating wire rope.
Long drum models: drum length and wire rope capacity x 1.5.

PRIMO INOX

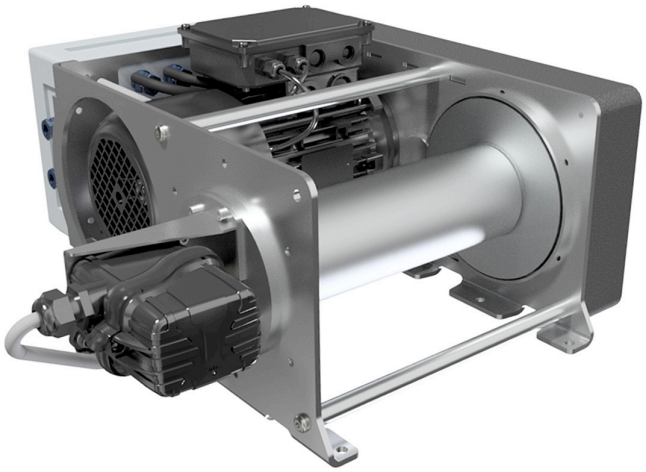

Capacities from 250 to 990 kg.
Electric winches designed for simple lifting or pulling applications in corrosive environment, benefiting from the same quality requirements than the TRBoxter range. Ideal for harsh environments : offshore, marine, chemical, food industries...

- FEM 1Bm - Moderate use.
- Chassis and drum in mechano-welded 316L stainless steel.
- Greased reducer with helical gears.
- Asynchronous motor. Class F. IP 66 protection.
- Automatic lack of current brake.
- Single phase power 230V-50Hz or three phase 400V-50Hz (3 Ph-230V on request) depending on model.
- Limit switch included (IP 66).
- IP 66 control box.
- Very low voltage control (BT) ensuring user protection against electrical risks.
- 3 buttons pendant control (Up - Down- Emergency Stop), not removable (3 m long control cable). IP 66 protection.

Options
- Wire rope (m/l or kit) and hook (see p. 86-90).
- Rope press roller.
- Grooved drum.
- Rope slack switch (see p. 64-70).

Strong points



Limit switches included (IP 66/67).



IP 66 control box (included).

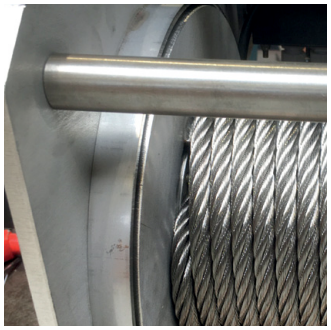

Highly reliable cable clamp not requiring special tool with rope winding direction guide. Nut cage for easy attachment.



IP 66 Pendant Control. Marine type electric cable (without halogen). Harting type plug, IP66 protection.

Applications



Marine industry.



Food industry.



Offshore industry.



Chemical industry...

COMPLETE DATA SHEET ON huchez.com

Dimensions

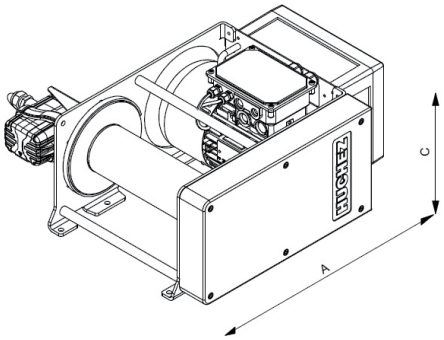

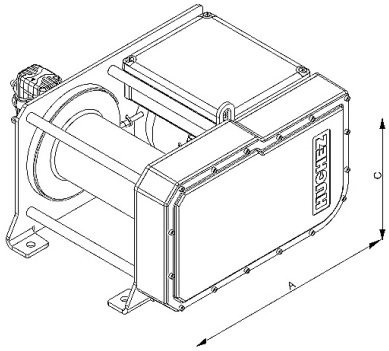

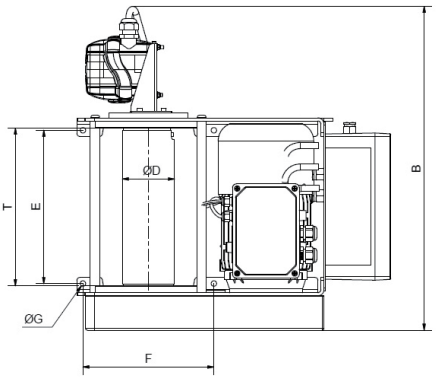

Models	PRIMO INOX BT 250	PRIMO INOX BT 400	PRIMO INOX BT 990
A mm	495	495	580*
B mm	528	528	615
C mm	244*	244*	326
Ø D mm	85	85	140
E mm	250	250	260
F mm	214	214	280
Ø G mm	9	9	17
T mm	257	257	280

* The value can vary according to the motor terminal.

Technical characteristics

References	PRIMO INOX BT 251	PRIMO INOX BT 253	PRIMO INOX BT 401	PRIMO INOX BT 403	PRIMO INOX BT 991	PRIMO INOX BT 993
Capacity top layer kg	**250**	**250**	**400**	**400**	**990**	**990**
Capacity 1st layer kg	300	300	400	400	990	990
Nb of layers	4	4	3	3	3	3
Maxi. Drum capacity m	63	63	39	39	42	42
1st layer drum capacity m	13	13	11	11	11	11
Wire rope Ø mm	5	5	6	6	10	10
Speed m/min	10.3	10.3	8	8	5.2	5.2
FEM	1Bm	1Bm	1Bm	1Bm	1Bm	1Bm
Motor kW	0.75	0.75	0.75	0.75	1.1	1.1
Power	1 Ph - 230V	3 Ph - 400V	1 Ph - 230V	3 Ph - 400V	1 Ph - 230 V	3 Ph - 400V
Weight (without wire rope) kg	40	40	40	40	90	90
Price €	**6 321**	**6 321**	**6 321**	**6 321**	**8 415**	**8 113**

The wire rope diameter corresponds to the capacity on the top layer with a safety coefficient of (about) 5 when lifting with non-rotating wire rope.

PRO-LIFT SOLUTIONS

TRBOXTER INOX

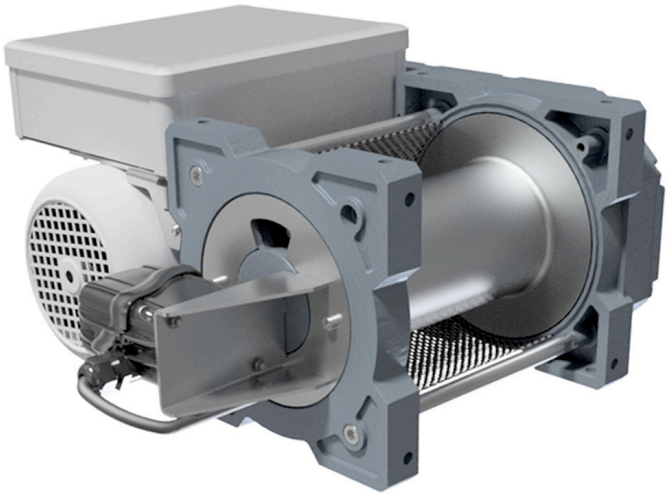

Capacities from 250 to 990 kg.
Multifunctional compact electric winches designed for simple lifting or pulling applications in corrosive environment. Ideal for harsh environments : offshore, marine, chemical, food industries....

- FEM 1Bm / 1Am - Moderate to accentuated use, depending on the model.
- Aluminum housing with C4 marine paint and 316L stainless steel drum.
- Greased reducer with helical gears.
- Asynchronous motor. Class F. IP 66 protection.
- Automatic lack of current brake.
- Single phase power 230V-50Hz or three phase 400V-50Hz (other tension on request) depending on model.
- Very low voltage control (BT) ensuring user protection against electrical risks.
- IP 66 control box.
- 3 buttons pendant control (Up - Down- Emergency Stop), not removable (3 m long control cable). IP 66 protection.

Options
- Wire rope (m/l or kit) and hook (see p. 86-90).
- Limit switch (IP66).
- Electronic load limiter.
- Rope press roller.
- Rope slack switch.
- Grooved drum.
- Other options, see p. 64-70.

Strong points



IP 66 Pendant control. Marine type electric cable (without halogen). Harting type plug, IP66 protection.

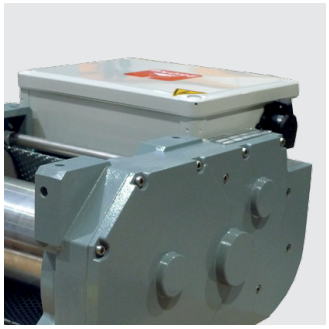

IP 66 control box included.

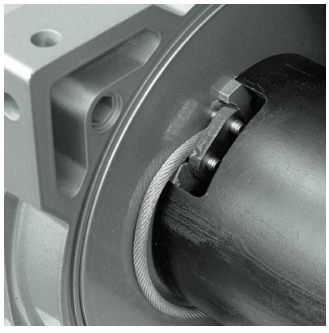

Highly reliable cable clamp not requiring special tool with rope winding direction guide. Nut cage for easy attachment.

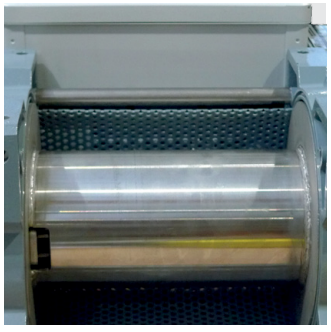

Drum protected by an orientable perforated metal sheet . Wide flanges for large cable capacity.

Applications



Marine industry.



Food industry.



Offshore industry.



Chemical industry...

PROLIFT SOLUTIONS

COMPLETE DATA SHEET ON huchez.com

Dimensions

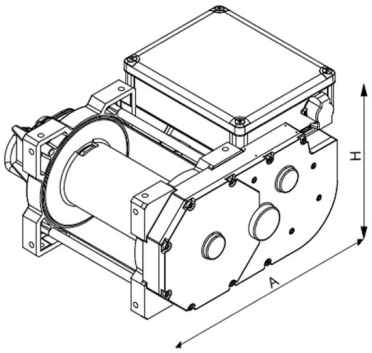

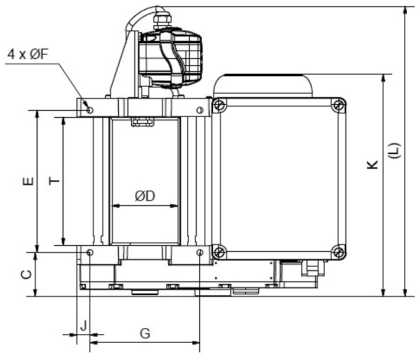

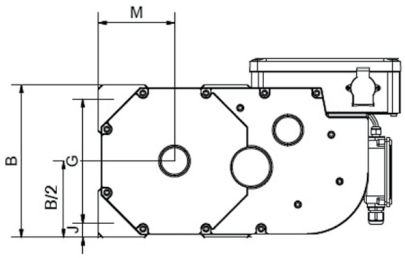

Models	TRBOXTER INOX 250		TRBOXTER INOX 500		TRBOXTER INOX 750		TRBOXTER INOX 990	
	Standard	Long	Standard	Long	Standard	Long	Standard	Long
A mm*	483	483	483	483	549	549	549	549
Ø D mm	118	118	118	118	150	150	150	150
E mm	255	370	255	370	318	463	318	463
Ø F mm	10.5	10.5	10.5	10.5	12.5	12.5	12.5	12.5
G mm	197	197	197	197	246	246	246	246
H mm	284.5	284.5	284.5	284.5	329	329	329	329
K mm*	398.5	513.5	398.5	513.5	456	601	456	601
L mm**	525	640	525	640	625	770	625	770
T mm	230	345	230	345	290	435	290	435

* The value can vary according to the motor terminal. ** with limit switch option.

Technical characteristics

References	TRBOXTER INOX 251 BT 20	TRBOXTER INOX 253 BT 20	TRBOXTER INOX 501 BT 10	TRBOXTER INOX 503 BT 10	TRBOXTER INOX 751 BT 5	TRBOXTER INOX 753 BT 5	TRBOXTER INOX 991 BT 5	TRBOXTER INOX 993 BT 5
Capacity top layer kg	**250**	**250**	**500**	**500**	**750**	**750**	**990**	**990**
Capacity 1st layer kg	300	300	500	500	900	900	990	990
Nb of layers	3	3	3	3	3	3	3	3
Maxi. Drum capacity m	54	54	40	40	53	53	48	48
1st layer drum capacity m	15	15	11	11	15	15	13	13
Wire rope Ø mm	5	5	7	7	9	9	10	10
Speed m/min	22	22	12	12	6.5	6.5	5	5
FEM	1Am	1Am	1Bm	1Bm	1Am	1Am	1Bm	1Bm
Motor kW	1.1	1.1	1.1	1.1	1.1	1.1	1.1	1.1
Power	1Ph 230V	3 Ph 400V	1 Ph 230V	3 Ph 400V	1 Ph 230V	3 Ph 400V	1 Ph 230V	3 Ph 400V
Weight (without wire rope) kg	55	55	55	55	95	95	95	95
Price €								
Standard drum model	**6 037**	**6 037**	**6 037**	**6 037**	**6 862**	**6 862**	**6 862**	**6 862**
Long drum model	**6 265**	**6 265**	**6 265**	**6 265**	**7 161**	**7 161**	**7 161**	**7 161**
Limit switch - Opt.	**717**	**717**	**717**	**717**	**717**	**717**	**717**	**717**
Electronic load limiter - Opt.	**558**	**558**	**558**	**558**	**558**	**558**	**558**	**558**

The wire rope diameter corresponds to the capacity on the top layer with a safety coefficient of (about) 5 when lifting with non-rotating wire rope.
Long drums models: drum length and wire rope capacity x 1,5.

See the following pages : High lifting range p. 52

INDUSTRIA



Industria
Orthogonal model.

Capacity from 1 to 10 t.
Compact electric winches originally designed to meet the needs of the industrial sector during lifting/pulling applications. Vertical fixation possible.

- FEM 1Am / 2m / 3m - Moderate, heavy or very heavy use according to model.
- Steel mechano-welded structure shot-blasted and painted.
- Planetary gear (reduced maintenance) in coaxial or orthogonal version.
- Asynchronous motor in horizontal position. IP 55 protection.
- Automatic lack of current brake.
- Single phase power 230V-50Hz or three phase 400V-50Hz (other tension on request) depending on model.
- Very low voltage control (BT) ensuring user protection against electrical risks : single speed models (BT) or speed variation model (VV). In addition to the advantages of very low voltage, the VV control allows variation of the winding speed, smooth starts and stops.
- Thermal circuit breaker.
- 3 buttons pendant control (Up - Down- Emergency Stop):
  - Removable (3 m long control cable) on BT models.
  - Not removable (3 m long control cable) on VV models.

Options
- Wire rope (m/l or kit) and hook (see p. 86-90).
- Limit switch.
- Electronic load limiter.
- Rope press roller.
- Rope slack switch.
- Bottom frame.
- Upward position for the motor.
- Radio control.
- Other options, on request (see p. 64-70).

Strong points

- Many fixation possibilities (on trolley see p. 54).
- Upward position for the motor.
- Wire rope anti-escape system. Safety : reduce space between the tie rod and the drum.



The tie rods can be positioned according to the wire rope exit. Many wire rope exits possible.



Coaxial model INDUSTRIA.

Applications



Manipulation of a crinoline ladder.



Lifting of conveyor arm.



Hatches lifting.



Mooring of barges between them for river navigation...

See the following pages : High lifting range p. 53

COMPLETE DATA SHEET ON huchez.com

Dimensions

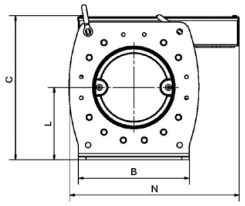

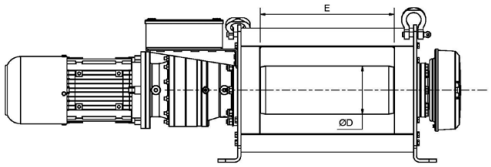

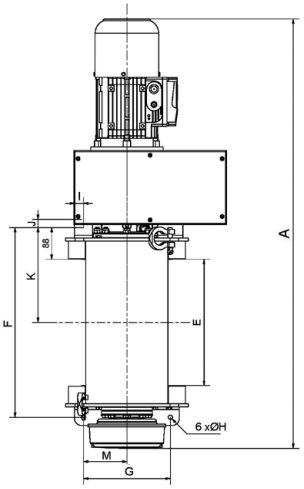

△ Coaxial model.

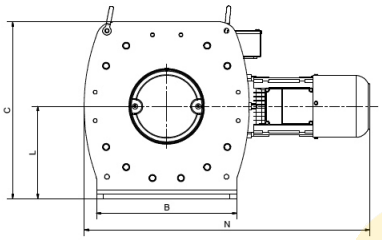

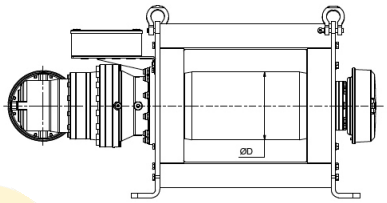

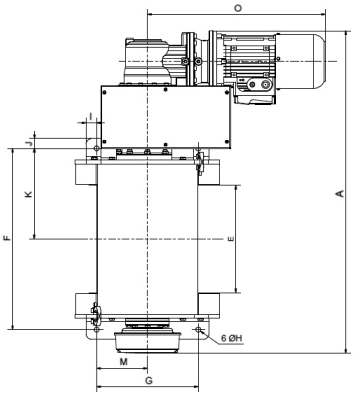

△ Orthogonal model.

Models	INDUSTRIA										
	1T ortho.	2T ortho.	3T ortho.	4T ortho.	5T ortho.	6T ortho.	7T ortho.	8T ortho.	9T ortho.	10T ortho.	1T coaxial***
	05/10BT	05/09BT	03/06BT	02/05BT	03/07BT	02/06BT	02/06BT	02/05BT	02/05BT	03/05BT	05/10BT
A mm**	911	1050/1045	1065/1090	1169/1194	1194/1220	1224/1250	1241/1267	1241/1267	1288/1314	1288/1314	1159/1189
B mm	290	420	420	520	520	650	700	700	840	840	290
C mm	375	500	500	665	665	765	870	870	975	975	375
Ø D mm*	125	219.1 (267)	219.1 (267)	292 (355,6)	292 (355,6)	323.9 (406,4)	323.9 (457,2)	355.6 (457,2)	406.4 (495)	406.4 (495)	125
E mm**	350	350	350	350	350	350	350	350	350	350	350
F mm**	525	590	590	600	600	600	720	720	720	720	525
G mm	240	330	330	420	420	420	620	620	750	750	240
Ø H mm	12	16	16	22	22	22	30	30	32	32	12
N mm	716/748	823/902	823/902	905/984	954/1190	1013/1181	1103/1271	1133/1271	1176/1314	1176/1314	443

Models	INDUSTRIA										
	1T ortho.	2T ortho.	3T ortho.	4T ortho.	5T ortho.	6T ortho.	7T ortho.	8T ortho.	9T ortho.	10T ortho.	1T coaxial***
	05/10/28VV	05/09/23VV	03/06/15VV	02/05/12VV	03/07/17VV	02/06/14VV	02/06/15VV	02/05/13VV	02/05/13VV	03/05/10VV	05/10VV
A mm**	911/911/931	1050/1045 /1070	1065/1090 /1085	1169/1194 /1161	1194/1220 /1195	1224/1250 /1225	1241/1267 /1248	1241/1340 /1248	1288/1367 /1468	1288/1367 /1459	1159/1189
B mm	290	420	420	520	520	650	700	700	840	840	290
C mm	375	500	579/500	737/665	665	765	870	870	975	975	375
Ø D mm*	125	219.1 (267)	219.1 (267)	292 (355,6)	292 (355,6)	323.9 (406,4)	323.9 (457,2)	355.6 (457,2)	406.4 (495)	406.4 (495)	125
E mm**	350	350	350	350	350	350	350	350	350	350	350
F mm**	525	590	590	600	600	600	720	720	720	720	525
G mm	240	330	330	420	420	420	620	620	750	750	240
Ø H mm	12	16	16	22	22	22	30	30	32	32	12
N mm	716/748 /909	823/902 /1040	823/902 /1040	905/1052 /1157	1022/1122 /1296	1067/1220 /1355	1103/1271 /1540	1133/1271 /1540	1176/1314 /1590	1176/1314 /1590	443

* Data about INDUSTRIA - FEM/ISO 3m/M6 models in brackets. **Long drum models : dimensions A, E and F + 250 mm.
***Dimensions of other coaxial models : on request.

Technical characteristics INDUSTRIA

FEM/ISO 1Am/M4 classification

Very low voltage control, 1 speed models (BT)

References	1T		2T		3T		4T		5T	
	05BT	10BT	05BT	09BT	03BT	06BT	02BT	05BT	03BT	07BT
Capacity top layer kg	**1 000**	**1 000**	**2 000**	**2 000**	**3 000**	**3 000**	**4 000**	**4 000**	**5 000**	**5 000**
Capacity 1st layer kg	1 255	1 255	2 420	2 420	3 765	3 765	4 985	4 985	6 230	6 230
Nb of layers	3	3	3	3	3	3	3	3	3	3
Maxi. Drum capacity m*	60 (-)	60 (-)	71 (120)	71 (120)	59 (102)	59 (102)	60 (105)	60 (105)	60 (105)	60 (105)
1st layer drum capacity m*	17 (-)	17 (-)	20 (35)	20 (35)	16 (28)	16 (28)	16 (29)	16 (29)	16 (29)	16 (29)
Wire rope Ø mm	8	8	11.5	11.5	14	14	18	18	18	18
Speed top layer m/min	5	10.5	5.5	9.5	3.5	5.5	2.5	4.5	3	7.5
Speed 1st layer m/min	4	8.5	4.5	8	2.5	4.5	2	3.5	2.5	6
Motor kW	1.1	2.2	2.2	4	2.2	4	2.2	4	3	9.2
Power	3 Ph - 400V		3 Ph - 400V		3 Ph - 400V		3 Ph - 400V		3 Ph - 400V	
Weight (without wire rope) kg	140	150	260	280	260	280	440	470	450	530
Price €										
Coaxial model - standard drum	**6 576**	**6 720**	**9 141**	**9 532**	**9 982**	**9 929**	**12 320**	**13 321**	**15 468**	**17 834**
Coaxial model - long drum	**-**	**-**	**10 016**	**10 397**	**10 857**	**10 796**	**13 193**	**14 188**	**16 351**	**18 751**
Orthogonal model - standard drum	**7 058**	**7 203**	**9 644**	**9 842**	**10 084**	**10 276**	**13 090**	**13 755**	**16 170**	**18 317**
Orthogonal model - long drum	**-**	**-**	**10 518**	**10 709**	**10 960**	**11 142**	**13 966**	**14 621**	**17 053**	**19 234**
Limit switch - Opt.	**597**	**597**	**597**	**597**	**597**	**597**	**597**	**597**	**597**	**597**
Electronic load limiter - Opt.	**831**	**831**	**831**	**831**	**831**	**831**	**831**	**831**	**831**	**831**

References	6T		7T		8T		9T		10T	
	02BT	06BT	02BT	06BT	02BT	05BT	02BT	05BT	03BT	05BT
Capacity top layer kg	**6 000**	**6 000**	**7 000**	**7 000**	**8 000**	**8 000**	**9 000**	**9 000**	**10 000**	**10 000**
Capacity 1st layer kg	7 480	7 480	8 725	8 725	9 975	9 975	11 120	11 120	12 355	12 355
Nb of layers	3	3	3	3	3	3	3	3	3	3
Maxi. Drum capacity m*	60 (104)	60 (104)	60 (104)	60 (104)	60 (104)	60 (104)	62 (107)	62 (107)	62 (107)	62 (107)
1st layer drum capacity m*	16 (29)	16 (29)	15 (28)	15 (28)	15 (28)	15 (28)	16 (29)	16 (29)	16 (29)	16 (29)
Wire rope Ø mm	20	20	22	22	22	22	24	24	24	24
Speed top layer m/min	2	6	2	5.5	2.5	5	2	4.5	2	4.5
Speed 1st layer m/min	1.5	5	1.5	4.5	2	4	1.5	4	2	3.5
Motor kW	3	9.2	3	9.2	4	9.2	4	9.2	5.5	9.2
Power	3 Ph - 400V		3 Ph - 400V		3 Ph - 400V		3 Ph - 400V		3 Ph - 400V	
Weight (without wire rope) kg	580	660	840	910	850	910	1160	1230	1180	1230
Price €										
Coaxial model - standard drum	**19 063**	**21 461**	**21 417**	**23 768**	**23 185**	**26 068**	**25 279**	**28 283**	**33 485**	**34 567**
Coaxial model - long drum	**19 020**	**22 402**	**22 456**	**24 847**	**24 204**	**27 147**	**26 424**	**29 495**	**34 723**	**35 017**
Orthogonal model - standard drum	**19 418**	**21 844**	**22 073**	**24 448**	**23 828**	**26 749**	**26 000**	**29 044**	**34 262**	**33 803**
Orthogonal model - long drum	**20 326**	**22 787**	**23 114**	**25 528**	**24 847**	**27 827**	**27 146**	**30 256**	**35 500**	**35 782**
Limit switch - Opt.	**597**	**597**	**597**	**597**	**597**	**597**	**597**	**597**	**597**	**597**
Electronic load limiter - Opt.	**831**	**831**	**831**	**831**	**831**	**831**	**831**	**831**	**831**	**831**

△ * Data for long drum models in brackets.
The wire rope diameter corresponds to the capacity on the top layer with a safety coefficient of (about) 5 when lifting with non-rotating wire rope.

(1) Model with 3 m away control box.* Data for long drum models in brackets. ▷
The wire rope diameter corresponds to the capacity on the top layer with a safety coefficient of (about) 5 when lifting with non-rotating wire rope.

PRO-LIFT SOLUTIONS

COMPLETE DATA SHEET ON huchez.com

Technical characteristics INDUSTRIA

FEM/ISO 1Am/M4 classification

Very low voltage control, speed variation models (VV)

References	1T			2T			3T		
	05VV	10VV	28VV (1)	05VV	09VV	23VV (1)	03VV	06VV	15VV (1)
Capacity top layer kg	**1 000**	**1 000**	**1 000**	**2 000**	**2 000**	**2 000**	**3 000**	**3 000**	**3 000**
Capacity 1st layer kg	1 255	1 255	1 255	2 420	2 420	2 420	3 765	3 765	3 765
Nb of layers	3	3	3	3	3	3	3	3	3
Maxi. Drum capacity m*	60 (-)	60 (-)	60 (-)	71 (120)	71 (120)	71 (120)	59 (102)	59 (102)	59 (102)
1st layer drum capacity m*	17 (-)	17 (-)	17 (-)	20 (35)	20 (35)	20 (35)	16 (28)	16 (28)	16 (28)
Wire rope Ø mm	8	8	8	11.5	11.5	11.5	14	14	14
Speed top layer m/min	0.5-5	1-10.5	2-28	0.5-5.5	0.9-9.5	2-23	0.3-3.5	0.5-5.5	1-15
Speed 1st layer m/min	0.4-4	0.8-8.5	2.3-23	0.4-4.5	0.8-8	1.9-19	0.2-2.5	0.4-4.5	1.2-12
Motor kW	1.1	2.2	5.5	2.2	4	9.2	2.2	4	9.2
Power	1 Ph - 230V 3 Ph - 400V	3 Ph 400V	1 Ph - 230V 3 Ph - 400V	3 Ph - 400V	1 Ph - 230V 3 Ph - 400V	3 Ph-400V	1 Ph - 230V 3 Ph - 400V	3 Ph-400V	
Weight (without wire rope) kg	150	155	210	270	300	360	270	300	360
Price €									
Coaxial model - standard drum	**8 816**	**9 032**	**-**	**11 453**	**12 277**	**-**	**12 294**	**12 675**	**-**
Coaxial model - long drum	**-**	**-**	**-**	**12 328**	**13 144**	**-**	**13 168**	**13 542**	**-**
Orthogonal model - standard drum	**9 297**	**9 515**	**12 371**	**11 956**	**12 589**	**17 007**	**12 399**	**13 021**	**17 156**
Orthogonal model - long drum	**-**	**-**	**-**	**12 832**	**13 454**	**17 924**	**13 273**	**13 888**	**18 073**
Limit switch - Opt.	**597**	**597**	**597**	**597**	**597**	**597**	**597**	**597**	**597**
Electronic load limiter - Opt.	**831**	**831**	**831**	**831**	**831**	**831**	**831**	**831**	**831**

References	4T			5T			6T		
	02VV	05VV	12VV (1)	03VV	07VV	17VV (1)	02VV	06VV	14VV (1)
Capacity top layer kg	**4 000**	**4 000**	**4 000**	**5 000**	**5 000**	**5 000**	**6 000**	**6 000**	**6 000**
Capacity 1st layer kg	4 985	4 985	4 985	6 230	6 230	6 230	7 480	7 480	7 480
Nb of layers	3	3	3	3	3	3	3	3	3
Maxi. Drum capacity m*	60 (105)	60 (105)	60 (105)	60 (105)	60 (105)	60 (105)	60 (104)	60 (104)	60 (104)
1st layer drum capacity m*	16 (29)	16 (29)	16 (29)	16 (29)	16 (29)	16 (29)	16 (29)	16 (29)	16 (29)
Wire rope Ø mm	18	18	18	18	18	18	20	20	20
Speed top layer m/min	0.2-2.5	0.4-4.5	1.0-12	0.3-3	0.7-7.5	1.0-17	0.2-2	0.6-6	1.0-14
Speed 1st layer m/min	0.2-2	0.3-3.5	1.0-10	0.2-2.5	0.6-6	1.4-14	0.1-1.5	0.5-5	1.1-11
Motor kW	2.2	4	9.2	3	9.2	15	3	9.2	15
Power	1 Ph-230V / 3 Ph-400V	3 Ph - 400V		3 Ph - 400V			3 Ph - 400V		
Weight (without wire rope) kg	450	500	550	480	540	615	610	670	745
Price €									
Coaxial model - standard drum	**14 669**	**16 067**	**-**	**18 029**	**23 049**	**-**	**21 623**	**26 673**	**-**
Coaxial model - long drum	**15 506**	**16 934**	**-**	**18 912**	**23 965**	**-**	**22 532**	**27 618**	**-**
Orthogonal model - standard drum	**15 403**	**16 500**	**20 423**	**18 731**	**23 531**	**26 097**	**21 980**	**27 058**	**29 920**
Orthogonal model - long drum	**16 278**	**17 367**	**21 339**	**19 615**	**24 448**	**26 989**	**22 887**	**28 001**	**30 839**
Limit switch - Opt.	**597**	**597**	**597**	**597**	**597**	**597**	**597**	**597**	**597**
Electronic load limiter - Opt.	**831**	**831**	**831**	**831**	**831**	**831**	**831**	**831**	**831**

References	7T			8T			9T			10T		
	02VV	06VV	15VV (1)	02VV	05VV	13VV (1)	02VV	05VV	13VV (1)	03VV	05VV	10VV (1)
Capacity top layer kg	**7 000**	**7 000**	**7 000**	**8 000**	**8 000**	**8 000**	**9 000**	**9 000**	**9 000**	**10 000**	**10 000**	**10 000**
Capacity 1st layer kg	8 725	8 725	8 725	9 975	9 975	9 975	11 120	11 120	11 120	12 355	12 355	12 355
Nb of layers	3	3	3	3	3	3	3	3	3	3	3	3
Maxi. Drum capacity m*	60 (104)	60 (104)	60 (104)	60 (104)	60 (104)	60 (104)	62 (107)	62 (107)	62 (107)	62 (107)	62 (107)	62 (107)
1st layer drum capacity m*	15 (28)	15 (28)	15 (28)	15 (28)	15 (28)	15 (28)	16 (29)	16 (29)	16 (29)	16 (29)	16 (29)	16 (29)
Wire rope Ø mm	22	22	22	22	22	22	24	24	24	24	24	24
Speed top layer m/min	0.2-2	0.5-5.5	1-15	0.2-2.5	0.5-5	1-13	0.2-2	0.4-4.5	1-13	0.2-2.5	0.4-4.5	1-10
Speed 1st layer m/min	0.1-1.5	0.4-4.5	1.2-12	0.2-2	0.4-4	1-Oct	0.1-1.5	0.4-4	1.1-11	0.2-2	0.3-3.5	0.8-8
Motor kW	3	9.2	22	4	9.2	22	4	9.2	22	5.5	9.2	22
Power	3 Ph - 400V			3 Ph - 400V			3 Ph - 400V			3 Ph - 400V		
Weight (without wire rope) kg	870	920	1085	880	920	1085	1190	1250	1415	1210	1250	1415
Price €												
Coaxial model - standard drum	**23 979**	**28 981**	**-**	**25 932**	**31 282**	**-**	**28 025**	**33 498**	**-**	**36 852**	**39 017**	**-**
Coaxial model - long drum	**25 017**	**30 060**	**-**	**26 951**	**32 361**	**-**	**29 171**	**34 709**	**-**	**38 088**	**40 231**	**-**
Orthogonal model - standard drum	**24 635**	**29 663**	**36 238**	**26 575**	**31 961**	**38 106**	**28 747**	**34 259**	**42 988**	**37 629**	**39 779**	**46 285**
Orthogonal model - long drum	**25 674**	**30 740**	**37 370**	**27 593**	**33 041**	**39 241**	**29 891**	**35 471**	**44 135**	**38 864**	**40 995**	**47 433**
Limit switch - Opt.	**597**	**597**	**597**	**597**	**597**	**597**	**597**	**597**	**597**	**597**	**597**	**597**
Electronic load limiter - Opt.	**831**	**831**	**831**	**831**	**831**	**831**	**831**	**831**	**831**	**831**	**831**	**831**

Technical characteristics INDUSTRIA

FEM/ISO 3m/M6 classification

Very low voltage control, 1 speed models (BT)

References	2T		3T		4T		5T		6T	
	05BT	09BT	03BT	06BT	02BT	05BT	03BT	07BT	02BT	06BT
Capacity top layer kg	**2 000**	**2 000**	**3 000**	**3 000**	**4000**	**4000**	**5000**	**5000**	**6000**	**6000**
Capacity 1st layer kg	2 750	2 750	4 352	4 352	4 880	4 880	6 250	6 250	6 970	6 970
Nb of layers	3	3	3	3	3	3	3	3	3	3
Maxi. Drum capacity m*	74 (128)	74 (128)	69 (120)	69 (120)	70 (124)	70 (124)	70 (124)	70 (124)	72 (126)	72 (126)
1st layer drum capacity m*	20 (13)	20 (13)	19 (34)	19 (34)	19 (35)	19 (35)	19 (35)	19 (35)	19 (35)	19 (35)
Wire rope Ø mm	13	13	14	14	18	18	18	18	20	20
Speed top layer m/min	5	9.5	3.5	5	2.5	4.5	3	7.5	2	6
Speed 1st layer m/min	4	8	2.5	4	2	3.5	2.5	6	1.5	5
Motor kW	2.2	4	2.2	4	2.2	4	3	9.2	3	9.2
Power	3 Ph 400V	3 Ph 400V	3 Ph 400V	3 Ph 400V	3 Ph 400V	3 Ph 400V	3 Ph 400V	3 Ph 400V	3 Ph 400V	3 Ph 400V
Weight (without wire rope) kg	275	295	275	295	465	495	475	560	610	695
Price €										
Coaxial model - standard drum	**On request**									
Coaxial model - long drum	**On request**									
Orthogonal model - standard drum	**9 898**	**10 311**	**10 339**	**10 528**	**13 343**	**14 005**	**16 427**	**18 584**	**20 314**	**22 774**
Orthogonal model - long drum	**10 773**	**11 177**	**11 214**	**11 393**	**13 672**	**14 871**	**17 309**	**19 500**	**21 222**	**23 716**
Limit switch - Opt.	**597**	**597**	**597**	**597**	**597**	**597**	**597**	**597**	**597**	**597**
Electronic load limiter - Opt.	**831**	**831**	**831**	**831**	**831**	**831**	**831**	**831**	**831**	**831**

References	7T		8T		9T		10T	
	02BT	06BT	02BT	05BT	02BT	05BT	03BT	05BT
Capacity top layer kg	**7 000**	**7 000**	**8 000**	**8 000**	**9 000**	**9 000**	**10 000**	**10 000**
Capacity 1st layer kg	9 279	9 279	10 981	10 981	11 830	11 830	13 968	13 968
Nb of layers	3	3	3	3	3	3	3	3
Maxi. Drum capacity m*	73 (128)	73 (128)	72 (119)	72 (119)	72 (127)	72 (127)	67 (118)	67 (118)
1st layer drum capacity m*	19 (36)	19 (36)	17 (32)	17 (32)	18 (35)	18 (35)	17 (32)	17 (32)
Wire rope Ø mm	22	22	24	24	24	24	26	26
Speed top layer m/min	2	5,5	2,5	5	2	4	2,5	4
Speed 1st layer m/min	1,5	4,5	2	4	1,5	3,5	2	3
Motor kW	3	9,2	4	9,2	4	9,2	5,5	9,2
Power	3 Ph 400V	3 Ph 400V	3 Ph 400V	3 Ph 400V	3 Ph 400V	3 Ph 400V	3 Ph 400V	3 Ph 400V
Weight (without wire rope) kg	885	960	895	960	1 220	1 295	1 240	1 295
Price €								
Coaxial model - standard drum	**On request**							
Coaxial model - long drum	**On request**							
Orthogonal model - standard drum	**22 586**	**24 979**	**24 330**	**27 279**	**26 753**	**29 842**	**35 074**	**35 363**
Orthogonal model - long drum	**23 625**	**26 058**	**25 350**	**28 359**	**27 900**	**31 054**	**36 311**	**36 578**
Limit switch - Opt.	**597**	**597**	**597**	**597**	**597**	**597**	**597**	**597**
Electronic load limiter - Opt.	**831**	**831**	**831**	**831**	**831**	**831**	**831**	**831**

△ * Data for long drum models in brackets.
The wire rope diameter corresponds to the capacity on the top layer with a safety coefficient of (about) 5 when lifting with non-rotating wire rope.

(1) Model with 3 m away control box. * Data for long drum models in brackets. ▷
The wire rope diameter corresponds to the capacity on the top layer with a safety coefficient of (about) 5 when lifting with non-rotating wire rope.

COMPLETE DATA SHEET ON huchez.com

Technical characteristics INDUSTRIA

FEM/ISO 3m/M6 classification

Very low voltage control, speed variation models (VV)

References	2T			3T			4T		
	05VV	09VV	23VV (1)	03VV	06VV	15VV (1)	02VV	05VV	12VV (1)
Capacity top layer kg	**2 000**	**2 000**	**2 000**	**3 000**	**3 000**	**3 000**	**4 000**	**4 000**	**4 000**
Capacity 1st layer kg	2 750	2 750	2 750	4 352	4 352	4 352	4 880	4 880	4 880
Nb of layers	3	3	3	3	3	3	3	3	3
Maxi. Drum capacity m*	74 (128)	74 (128)	74 (128)	69 (120)	69 (120)	69 (120)	70 (124)	70 (124)	70 (124)
1st layer drum capacity m*	20 (13)	20 (13)	20 (13)	19 (34)	19 (34)	19 (34)	19 (35)	19 (35)	19 (35)
Wire rope Ø mm	13	13	13	14	14	14	18	18	18
Speed top layer m/min	0.5-5	0.9-9.5	2.2-22	0.3-3.5	0.5-5	1.4-14	0.2-2.5	0.4-4.5	1-12
Speed 1st layer m/min	0.4-4	0.8-8	1.8-18	0.2-2.5	0.4-4	1.2-12	0.2-2	0.3-3.5	1-10
Motor kW	2.2	4	9.2	2.2	4	9.2	2.2	4	9.2
Power	1 Ph - 230V 3 Ph - 400V	3 Ph - 400V		1 Ph - 230V 3 Ph - 400V	3 Ph - 400V		1 Ph - 230V 3 Ph - 400V	3 Ph - 400V	
Weight (without wire rope) kg	285	315	380	285	315	380	475	525	580
Price €									
Coaxial model - standard drum	**On request**		**-**	**On request**		**-**	**On request**		**-**
Coaxial model - long drum	**On request**		**-**	**On request**		**-**	**On request**		**-**
Orthogonal model - standard drum	**12 210**	**13 057**	**17 275**	**12 651**	**13 273**	**17 423**	**15 655**	**16 750**	**21 021**
Orthogonal model - long drum	**13 085**	**13 924**	**18 191**	**13 526**	**14 140**	**18 338**	**16 531**	**17 617**	**21 938**
Limit switch - Opt.	**597**	**597**	**597**	**597**	**597**	**597**	**597**	**597**	**597**
Electronic load limiter - Opt.	**831**	**831**	**831**	**831**	**831**	**831**	**831**	**831**	**831**

References	5T			6T			7T		
	03VV	07VV	17VV (1)	02VV	06VV	14VV (1)	02VV	06VV	15VV (1)
Capacity top layer kg	**5 000**	**5 000**	**5 000**	**6 000**	**6 000**	**6 000**	**7 000**	**7 000**	**7 000**
Capacity 1st layer kg	6 250	6 250	6 250	6 970	6 970	6 970	9 279	9 279	9 279
Nb of layers	3	3	3	3	3	3	3	3	3
Maxi. Drum capacity m*	70 (124)	70 (124)	70 (124)	72 (126)	72 (126)	72 (126)	73 (128)	73 (128)	73 (128)
1st layer drum capacity m*	19 (35)	19 (35)	19 (35)	19 (35)	19 (35)	19 (35)	19 (36)	19 (36)	19 (36)
Wire rope Ø mm	18	18	18	20	20	20	22	22	22
Speed top layer m/min	0,3-3	0,7-7,5	1,5-15,5	0,2-2	0,6-6	1-14	0,2-2	0,5-5,5	1,5-15
Speed 1st layer m/min	0,2-2,5	0,6-6	1,3-13	0,1-1,5	0,5-5	1,2-12	0,1-1,5	0,4-4,5	1,3-13
Motor kW	3	9,2	15	3	9,2	15	3	9,2	22
Power		3 Ph - 400V			3 Ph - 400V			3 Ph - 400V	
Weight (without wire rope) kg	505	570	650	645	705	785	915	970	1140
Price €									
Coaxial model - standard drum	**On request**		**-**	**On request**		**-**	**On request**		**-**
Coaxial model - long drum	**On request**		**-**	**On request**		**-**	**On request**		**-**
Orthogonal model - standard drum	**18 988**	**23 797**	**26 356**	**22 876**	**27 989**	**30 372**	**25 146**	**30 193**	**36 991**
Orthogonal model - long drum	**19 871**	**24 713**	**27 247**	**23 773**	**28 931**	**31 290**	**26 186**	**31 273**	**38 010**
Limit switch - Opt.	**597**	**597**	**597**	**597**	**597**	**597**	**597**	**597**	**597**
Electronic load limiter - Opt.	**831**	**831**	**831**	**831**	**831**	**831**	**831**	**831**	**831**

References	8T			9T			INDUSTRIA 10T		
	02VV	05VV	13VV (1)	02VV	05VV	13VV (1)	03VV	05VV	10VV (1)
Capacity top layer kg	**8 000**	**8 000**	**8 000**	**9 000**	**9 000**	**9 000**	**10 000**	**10 000**	**10 000**
Capacity 1st layer kg	10 981	10 981	10 981	11 830	11 830	11 830	13 968	13 968	13 968
Nb of layers	3	3	3	3	3	3	3	3	3
Maxi. Drum capacity m*	72 (119)	72 (119)	72 (119)	72 (127)	72 (127)	72 (127)	67 (118)	67 (118)	67 (118)
1st layer drum capacity m*	17 (32)	17 (32)	17 (32)	18 (35)	18 (35)	18 (35)	17 (32)	17 (32)	17 (32)
Wire rope Ø mm	24	24	24	24	24	24	26	26	26
Speed top layer m/min	0.2-2.5	0.5-5	1.2-12	0.2-2	0.4-4	1.2-12	0.2-2.5	0.4-4	1-10.5
Speed 1st layer m/min	0.2-2	0.4-4	1-Oct	0.1-1.5	0.3-3.5	1-Oct	0.2-2	0.3-3	0.8-8.5
Motor kW	4	9.2	22	4	9.2	22	5.5	9.2	22
Power		3 Ph - 400V			3 Ph - 400V			3 Ph - 400V	
Weight (without wire rope) kg	925	970	1140	1250	1315	1490	1275	1315	1490
Price €									
Coaxial model - standard drum	**On request**		**-**	**On request**		**-**	**On request**		**-**
Coaxial model - long drum	**On request**		**-**	**On request**		**-**	**On request**		**-**
Orthogonal model - standard drum	**27 076**	**32 494**	**38 972**	**29 499**	**35 056**	**43 741**	**38 440**	**40 577**	**47 038**
Orthogonal model - long drum	**28 096**	**33 572**	**39 993**	**30 645**	**36 269**	**44 888**	**39 677**	**41 793**	**48 186**
Limit switch - Opt.	**597**	**597**	**597**	**597**	**597**	**597**	**597**	**597**	**597**
Electronic load limiter - Opt.	**831**	**831**	**831**	**831**	**831**	**831**	**831**	**831**	**831**

TRBOXTER

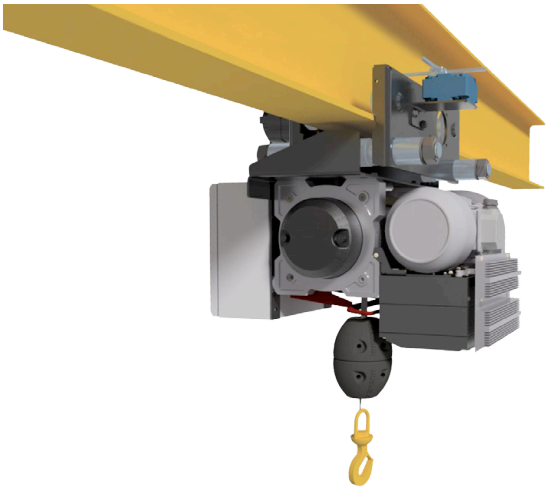

Capacity from 250 to 1500 kg.
Range of travel trolleys allowing the use of TRBoxter compact electric winches range on jib cranes or on IPE, IPN, HEB type rails...

- Push trolley or single speed electric trolley depending on model.
- 400V-50Hz three phase power.
- Upper limit switch fork and counter weight included.
- Pendant control (Lifting, Translating), removable (3 m long control cable).

Options
- Wire rope (m/l or kit) and hook (see p. 86-90).
- Travel limit switch.
- Power feeding line.

Strong points

- HUCHEZ counterweight included.
- Pendant control with lifting and translating functions.



Push trolley model.

Dimensions

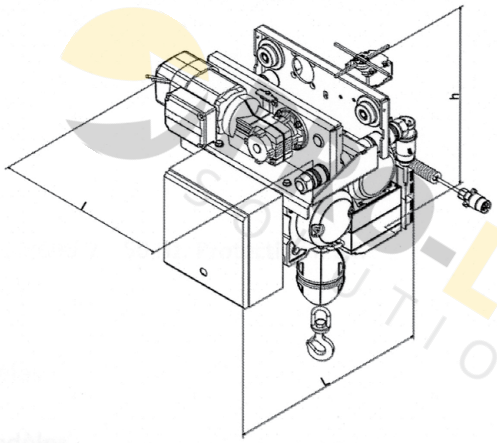

Electric trolley.

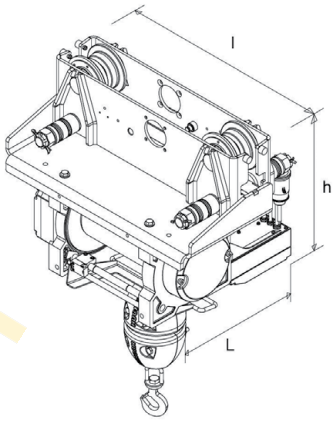

Push trolley.

Applications



Lifting and translating a load in a zoo.

Models	Chariot BOX0.5 L	Chariot BOX1.5 L	Chariot BOX0.5 E	Chariot BOX1.5 E
Lost headroom mm	760	915	760	915
L x l x h mm	545 x 550 x 575	400 x 610 x 750	585 x 550 x 575	600 x 610 x 750

Technical characteristics

References	Chariot BOX0.5 L	Chariot BOX1.5 L	Chariot BOX0.5 E	Chariot BOX1.5 E
Capacity kg	**500**	**1500**	**500**	**1 500**
Winch range	TRBoxter 250-500 (standard or long drum)	TRBoxter 600-1500 (standard or long drum)	TRBoxter 250-500 (standard or long drum)	TRBoxter 600-1500 (standard or long drum)
Type of trolley	Push trolley		Electric	
Beam width mm	60-250	75-250	60-250	75-250
Trolley speed m/min	-	-	20	14
Total mass (winch included) kg	116	204	136	224
Price €	**1 656**	**2 081**	**6 267**	**6 755**
Power feeding line (m/l) - Opt.	**-**	**-**	**143**	**143**
Travel limit switch - Opt.	**-**	**-**	**391**	**391**

COMPLETE DATA SHEET ON huchez.com

INDUSTRIA

Capacity from 2 to 5 t.
Range of travel trolleys allowing the use of INDUSTRIA electric winches range on jib cranes or on IPE, IPN, HEB type rails...

- Single speed electric trolley.
- 400V-50Hz three phase power.
- Upper limit switch fork and counterweight included.
- 5 buttons pendant control (Lifting-Translating-Emergency stop), not removable (3 m long control cable).

Options
- Wire rope (m/l or kit) and hook (see p. 86-90).
- Travel limit switch.
- Power feeding line.

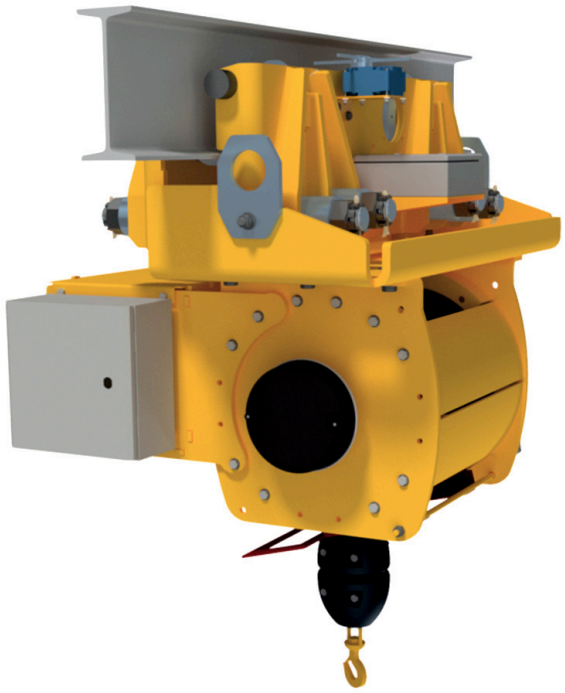

Dimensions

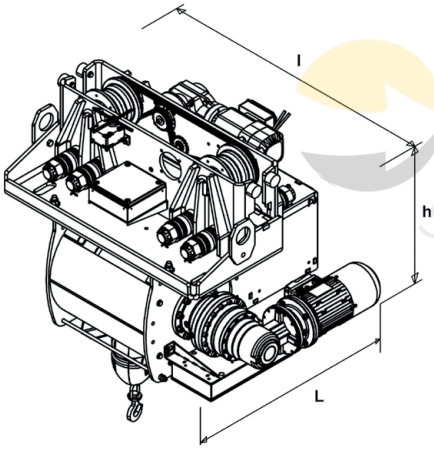

Models	Chariot IND3 E	Chariot IND5 E
Lost headroom mm	1 500	1 750
L x l x h mm	730 x 1100 x 910	730 x 1100 x 1075

Technical characteristics

References	Chariot IND3 E	Chariot IND5 E
Capacity kg	**3 000**	**5 000**
Winch range	Industria 2-3T (standard drum, long drum on request)	Industria 4-5T (standard drum, long drum on request)
Type of trolley	Electric	Electric
Beam width mm	80-310	80-310
Trolley speed m/min	6	6
Total mass (winch included) kg	700	1 020
Price €	**8 642**	**9 838**
Power feeding line (m/l) - Opt.	**143**	**143**
Travel limit switch - Opt.	**391**	**391**

Strong points

- HUCHEZ counterweight included.
- Pendant control with lifting and translating functions.

Applications



Lifting and translating heavy loads.



INDUSTRIA on a trolley (coaxial model) on a gantry crane.

TE



Capacity from 600 kg to 10 t.
Electrical winches with large winding capacities, designed for lifting applications.
Vertical fixation possible.

- FEM 1 Bm / 2m - Moderate or heavy use, depending on the model.
- Steel mechano-welded structure shot-blasted and painted.
- Bronze wheel and worm gear (600, 1000 and 1600 kg models) or with bevel gear and spur gears (other models).
- Gear secondary reducer.
- Asynchronous motor in horizontal position. IP 54 Protection.
- Automatic lack of current brake.
- Single phase power 230V-50Hz or three phase 400V-50Hz (other tensions on request) depending on model.
- Electric control box mounted on the winch included.
- Very low voltage control (BT) ensuring user protection against electrical risks : single speed models (BT) or speed variation models (VV). In addition to the advantages of very low voltage, the VV control allows variation of the winding speed, smooth starts and stops.
- Thermal circuit breaker.
- 3 buttons pendant control (Up - Down- Emergency Stop):
  - Removable (3 m long control cable) on BT models.
  - Not removable (3 m long control cable) on VV models.

Options
- Wire rope (m/l) and hook (see p. 86-90).
- Limit switch.
- Electronic load limiter.
- Rope press roller.
- Rope slack switch.
- Bottom frame.
- Tubular protection of the motor.
- Radio control.
- Other options, on request (see p. 64-70).

Strong points

- Many wire rope exits possible.



The modular design of the TE range easily allows all adaptations to your specific needs at the lowest cost.

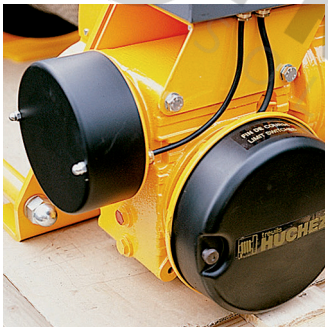

Robustness and reliability of Huchez mechanical parts.

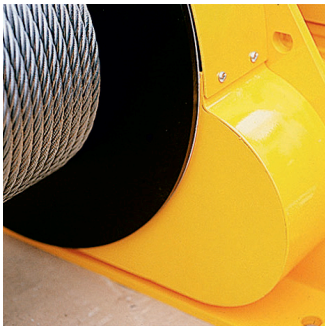

Safety : mechanical parts are protected.



Other drum dimensions on request.

COMPLETE DATA SHEET ON huchez.com

Dimensions

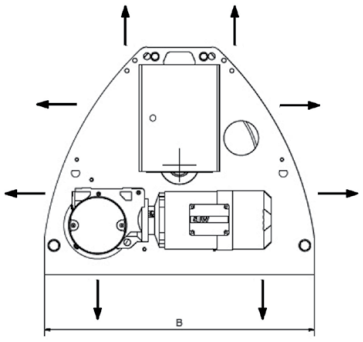

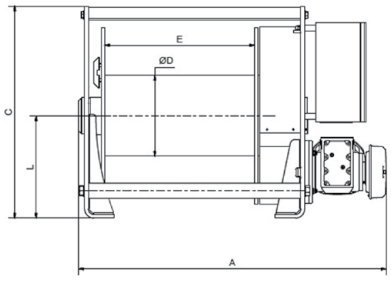

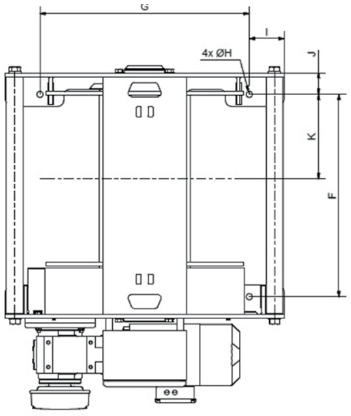

Models	600 to 1600 TE	2000 to 5000 TE	7500 TE	10000 TE
A mm	1 088	On request	1 471	1 659
B mm	720	1 000	1 200	1 240
C mm	545	973	1 143	1 295
Ø D mm	203	324	394	394
E mm (standard)*	600	600	800	800
F mm	665	725	922	1 216
G mm	570	750	1 000	1 000
H mm	18	22	28	27
I mm	75	125	100	120

* Up to 4 other possible drum lengths : dimensions on request

Applications

- Industry, Public works, sites requiring great lifting heights...
- Freight elevator.



Lifting load in a cement factory.



Installation of a formwork on a construction site.



Pulling weight used to compact snow on a sky jump.



Lifting conveyor belt to load barges.



Counterweight lifting.



Load guiding.



Lifting and lowering of a grappling hook.

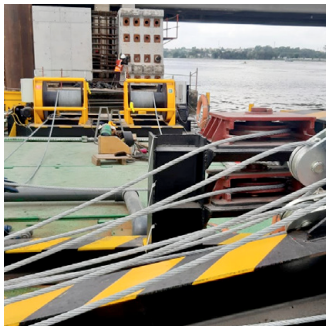

Skidding winches used on a building site.

PRO-LIFT SOLUTIONS

Technical characteristics TE

Very low voltage control, 1 speed models (BT)

References	TE 600 S			TE 1000 S		TE 1600 S		TE 2000 S	
	10BT	16BT	22BT	6BT	13BT	5BT	11BT	5BT	11BT
Capacity top layer kg	**600**	**600**	**600**	**1 000**	**1 000**	**1 600**	**1 600**	**2 000**	**2 000**
Capacity 1st layer kg	755	755	755	1 300	1 300	2 110	2 110	2 410	2 410
Nb of layers	5	5	5	5	5	4	4	4	4
Maxi. Drum capacity m*	325	325	325	280	280	160	160	235	235
1st layer drum capacity m*	56	56	56	48	48	33	33	52	52
Wire rope Ø mm	7	7	7	8	8	11.5	11.5	11.5	11.5
Speed m/min	10	16	22	6	13	5	11	5	11
FEM	2m	2m	2m	2m	2m	2m	2m	2m	2m
Motor kW	2.2	3	4	2.2	4	2.2	5.5	2.2	4
Power	3 Ph 400V	3 Ph 400V	3 Ph 400V	3 Ph 400V	3 Ph 400V	3 Ph 400V	3 Ph 400V	3 Ph 400V	3 Ph 400V
Weight (without wire rope) kg	215	220	220	215	220	215	220	670	700
Price €	**7 496**	**7 613**	**8 681**	**10 992**	**12 364**	**11 146**	**12 514**	**16 151**	**18 175**
Limit switch - Opt.	**597**	**597**	**597**	**597**	**597**	**597**	**597**	**597**	**597**
Electronic load limiter - Opt.	**831**	**831**	**831**	**831**	**831**	**831**	**831**	**831**	**831**

References	TE 3300 S		TE 5000 S			TE 7500 S	TE 10000 S
	4BT	7BT	2BT	4BT	11BT	4BT	6BT
Capacity top layer kg	**3 300**	**3 300**	**5 000**	**5 000**	**5 000**	**7 500**	**10 000**
Capacity 1st layer kg	4 220	4 220	6 575	6 575	6 575	9 875	14 230
Nb of layers	4	4	4	4	4	4	5
Maxi. Drum capacity m*	180	180	160	160	160	215	265
1st layer drum capacity m*	37	37	33	33	33	44	44
Wire rope Ø mm	15.8	15.8	18	18	18	22	24
Speed m/min	4	7	2	4	10	4	6
FEM	2m	2m	2m	2m	2m	2m	1Bm
Motor kW	2.2	4	2.2	4	11	5.5	11
Power	3 Ph - 400 V	3 Ph - 400 V	3 Ph - 400 V	3 Ph - 400 V	3 Ph - 400 V	3 Ph - 400 V	3 Ph - 400 V
Weight (without wire rope) kg	680	700	710	730	815	1250	1950
Price €	**16 455**	**18 488**	**18 529**	**19 943**	**26 429**	**30 423**	**42 069**
Limit switch - Opt.	**597**	**597**	**597**	**597**	**597**	**597**	**597**
Electronic load limiter - Opt.	**831**	**831**	**831**	**831**	**831**	**831**	**831**

The wire rope diameter corresponds to the capacity on the top layer with a safety coefficient of (about) 5 when lifting with non-rotating wire rope.

PRO-LIFT SOLUTIONS

COMPLETE DATA SHEET ON huchez.com
PRO-LIFT SOLUTIONS

Technical characteristics TE

Very low voltage control, speed variation models (VV)

References	TE 600 S			TE 1000 S		TE 1600 S	TE 2000 S
	10VV	16VV	22VV	6VV	13VV	11VV	11VV
Capacity top layer kg	**600**	**600**	**600**	**1 000**	**1 000**	**1 600**	**2 000**
Capacity 1st layer kg	755	755	755	1 300	1 300	2 110	2 410
Nb of layers	5	5	5	5	5	4	4
Maxi. Drum capacity m*	325	325	325	280	280	160	235
1st layer drum capacity m*	56	56	56	48	48	33	52
Wire rope Ø mm	7	7	7	8	8	11.5	11.5
Speed m/min	1-10	1.6-16	2.2-22	0.6-6	1.4-14	1.2-12	1.2-12
FEM	2m	2m	2m	2m	2m	2m	2m
Motor kW	2.2	3	4	2.2	4	5.5	4
Power	1 Ph - 230V 3 Ph - 400V	1 Ph - 230V 3 Ph - 400V	3 Ph - 400V	1 Ph - 230V 3 Ph - 400V	3 Ph - 400V	3 Ph - 400V	3 Ph - 400V
Weight (without wire rope) kg	215	220	220	215	220	220	700
Price €	**9 764**	**10 101**	**11 400**	**13 259**	**15 085**	**15 607**	**20 895**
Limit switch - Opt.	**597**	**597**	**597**	**597**	**597**	**597**	**597**
Electronic load limiter - Opt.	**831**	**831**	**831**	**831**	**831**	**831**	**831**

References	TE 3300 S		TE 5000 S			TE 7500 S	TE 10000 S
	4VV	7VV	2VV	4VV	11VV	4VV	6VV
Capacity top layer kg	**3 300**	**3 300**	**5 000**	**5 000**	**5 000**	**7 500**	**10 000**
Capacity 1st layer kg	4 220	4 220	6 575	6 575	6 575	9 875	14 230
Nb of layers	4	4	4	4	4	4	5
Maxi. Drum capacity m*	180	180	160	160	160	215	265
1st layer drum capacity m*	37	37	33	33	33	44	40
Wire rope Ø mm	15.8	15.8	18	18	18	22	24
Speed m/min	0.4-4	0.7-7	0.2-2	0.4-4	1-10	0.4-4	0.6-6
FEM	2m	2m	2m	2m	2m	2m	1Bm
Motor kW	2.2	4	2.2	4	11	5.5	11
Power	1 Ph - 230V 3 Ph - 400V	3 Ph - 400V	1 Ph - 230V 3 Ph - 400V	3 Ph - 400V	3 Ph - 400V	3 Ph - 400V	3 Ph - 400V
Weight (without wire rope) kg	680	700	710	730	815	1250	1950
Price €	**18 722**	**21 208**	**20 798**	**22 663**	**31 960**	**33 515**	**47 600**
Limit switch - Opt.	**597**	**597**	**597**	**597**	**597**	**597**	**597**
Electronic load limiter - Opt.	**831**	**831**	**831**	**831**	**831**	**831**	**831**

The wire rope diameter corresponds to the capacity on the top layer with a safety coefficient of (about) 5 when lifting with non-rotating wire rope.

PRO-LIFT SOLUTIONS

TRAKZIO



Capacity from 1,3 to 15 t in traction.
Electrical winches with large winding capacities, designed for traction/hauling applications.
Vertical fixation possible.

- Steel mechano-welded structure shot-blasted and painted.
- Asynchronous motor. IP 54 Protection.
- Automatic lack of current brake.
- Single phase power 230V-50Hz or three phase 400V-50Hz (other tensions on request) depending on model
- Electric control box mounted on the winch and 3 dead turns detector limit switch included.
- Very low voltage control (BT) ensuring user protection against electrical risks : single speed models (BT) or speed variation models (VV) and with Dynamic Power Optimization (D.P.O).
- Thermal circuit breaker.
- 3 buttons pendant control (Wind - Unwind - Emergency Stop):
  - Removable (3 m long control cable) on BT models.
  - Not removable with potentiometer (3 m long control cable) on VV models.

Options
- Wire rope (m/l) and hook (see p. 86-90).
- Bottom frame.
- Tubular protection of the motor.
- Radio control.
- Other options, on request (see p. 64-70).

Strong points

- In addition to the advantages of very low voltage, the VV control allows variation of the winding speed, smooth starts and stops.
- The Dynamic Power Optimization (D.P.O) allows the variable speed drive to adjust the speed of the winch to the effort required : on request.



Manual drum release when no load, ergonomic and secure.



3 dead turns detector limit switch.

Applications

- Mines and quarries.
- Industry, Public Works.
- Sites requiring great lifting heights....
- Moving wagons.



Pulling of flexible pipes (cement manufacturer).

Dimensions

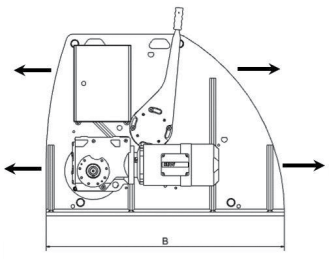

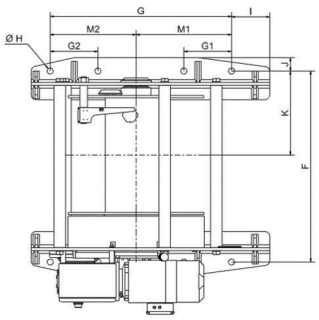

Models	TRAKZIO			
	1300 and 2100	2400 to 6500	10000	15000
A mm	1 116	1291 to 1424 depending on motor, on request.	1 601	1 590
B mm	740	1 250	1400	1400
C mm	696	1 090	1257	1600
Ø D mm	203	324	394	Ø394
E mm (standard)	600	600	800	800
F mm	665	1 000	1200	1200
G mm	570	950	1000	1100
H mm	4 x Ø18	8 x Ø33	10 x Ø33	12 x Ø33
I mm	75	200	250	200

PRO-LIFT SOLUTIONS

COMPLETE DATA SHEET ON huchez.com

Technical characteristics

Very low voltage control, 1 speed models (BT)
600 mm standard drum (800 mm for 10 and 15 T)

References	TRAKZIO 1300 S		TRAKZIO 2100 S		TRAKZIO 2400 S		TRAKZIO 4200 S		TRAKZIO 6500 S			TRAKZIO 10000 S	TRAKZIO 15000 S
	06BT	13BT	05BT	12BT	06BT	12BT	04BT	07BT	02BT	04BT	10BT	04BT	06BT
Capacity top layer kg	1000	1000	1500	1500	1 900	1 900	3 200	3 200	4 600	4 600	4 600	7 000	10 000
Capacity 1st layer kg	**1300**	**1300**	**2100**	**2100**	**2 400**	**2 400**	**4 200**	**4 200**	**6 500**	**6 500**	**6 500**	**10 000**	**15 000**
Nb of layers	5	5	5	5	5	5	5	5	5	5	5	5	5
Maxi. Drum capacity m*	275	275	230	230	290	290	270	270	210	210	210	280	260
1st layer drum capacity m*	45	45	35	35	48	48	44	44	32	32	32	43	39
Wire rope Ø mm	8	8	10	10	12	12	13	13	18	18	18	22	24
Speed m/min	6	13	5	12	6	12	4	7	2,5	4	10	4	6
Speed 1st layer m/min	5	10	3,5	8,5	5	9	3	5,5	2	3	7,5	3	4
Motor kW	2,2	4	2,2	5,5	2,2	4	2,2	4	2,2	4	11	5,5	11
Power	3 Ph - 400 V		3 Ph - 400 V		3 Ph - 400 V		3 Ph - 400 V		3 Ph - 400 V			3 Ph 400 V	3 Ph 400 V
Weight (without wire rope) kg	235	240	235	240	915	945	925	945	955	975	1060	Consult us	
Price €	**9 317**	**9 735**	**9 317**	**10 562**	**17 435**	**18 172**	**18 403**	**19 140**	**19 242**	**20 049**	**28 173**	**29 568**	**44 017**
Electronic load limiter - Opt.	**831**	**831**	**831**	**831**	**831**	**831**	**831**	**831**	**831**	**831**	**831**	**831**	**831**

The wire rope diameter corresponds to the capacity on the top layer with a safety coefficient of (about) 3 when pulling with wire rope.

Very low voltage control, speed variation models (VV)
600 mm standard drum (800 mm for 10 and 15 T)

References	TRAKZIO 1300 S			TRAKZIO 2100 S			TRAKZIO 2400 S		
	6VV1	6VV	13VV	05VV1	05VV	12VV	06VV1	06VV	12VV
Capacity top layer kg	1 000	1 000	1 000	1 500	1 500	1 500	1 900	1 900	1 900
Capacity 1st layer kg	**1 300**	**1 300**	**1 300**	**2 100**	**2 100**	**2 100**	**2 400**	**2 400**	**2 400**
Nb of layers	5	5	5	5	5	5	5	5	5
Maxi. Drum capacity m*	275	275	275	230	230	230	290	290	290
1st layer drum capacity m*	45	45	45	35	35	35	48	48	48
Wire rope Ø mm	8	8	8	10	10	10	12	12	12
Speed m/min	0.6-6	0.6-6	1.3-13	0.5-5	0.5-5	1.2-12	0.5-5	0.5-5	1.2-12
Speed 1st layer m/min	0.5-5	0.5-5	1-Oct	0.3-3.5	0.3-3.5	0.8-8.5	0.5-5	0.5-5	0.9-9
Motor kW	2.2	2.2	3	2.2	2.2	5.5	2.2	2.2	4
Power	1 Ph 230V	3 Ph 400V	3 Ph 400V	1 Ph 230V	3 Ph 400V	3 Ph 400V	1 Ph 230V	3 Ph 400V	3 Ph 400V
Weight (without wire rope) kg	235	235	240	235	235	240	915	915	945
Price €	**11 563**	**11 563**	**12 429**	**11 563**	**11 563**	**13 624**	**19 746**	**19 746**	**20 862**
Electronic load limiter - Opt.	**831**	**831**	**831**	**831**	**831**	**831**	**831**	**831**	**831**

References	TRAKZIO 4200 S			TRAKZIO 6500 S				TRAKZIO 10000 S	TRAKZIO 15000 S
	04VV1	04VV	07VV	02VV1	02VV	04VV	10VV	04VV	06VV
Capacity top layer kg	3 200	3 200	3 200	4 600	4 600	4 600	4 600	7 000	10 000
Capacity 1st layer kg	**4 200**	**4 200**	**4 200**	**6 500**	**6 500**	**6 500**	**6 500**	**10 000**	**15 000**
Nb of layers	5	5	5	5	5	5	5	5	5
Maxi. Drum capacity m*	270	270	270	210	210	210	210	280	260
1st layer drum capacity m*	44	44	44	32	32	32	32	43	39
Wire rope Ø mm	13	13	13	18	18	18	18	22	24
Speed m/min	0.4-4	0.4-4	0.7-7	0.2-2.5	0.2-2.5	0.4-4	1-Oct	0.4-4	0.6-6
Speed 1st layer m/min	0.3-3	0.3-3	0.5-5.5	0.2-2	0.2-2	0.3-3	0.7-7.5	0.3-3	0.4-4
Motor kW	2.2	2.2	4	2.2	2.2	4	11	5.5	11
Power	1 Ph 230V	3 Ph 400V	3 Ph 400V	1 Ph 230V	3 Ph 400V	3 Ph 400V	3 Ph 400V	3 Ph 400V	3 Ph 400V
Weight (without wire rope) kg	925	925	945	955	955	975	1060	On request	On request
Price €	**20 716**	**20 716**	**21 834**	**21 554**	**21 554**	**22 742**	**33 651**	**32 631**	**49 495**
Electronic load limiter - Opt.	**831**	**831**	**831**	**831**	**831**	**831**	**831**	**831**	**831**

The wire rope diameter corresponds to the capacity on the top layer with a safety coefficient of (about) 3 when pulling with wire rope.

TRAKZIO-R

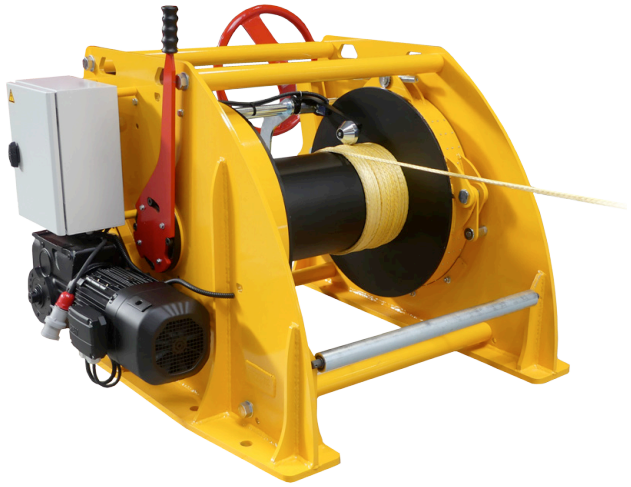

Capacity from 2,4 to 15 t in traction.
Holding capacity from 20 to 40 t.
Electrical winches with large winding capacities.
Vertical fixation possible.

- Steel mechano-welded structure shot-blasted and painted.
- Asynchronous motor. IP 54 Protection.
- Automatic lack of current brake on the motor.
- Manual holding band brake on the drum.
- Single phase power 230V-50Hz or three phase 400V-50Hz (other tensions on request) depending on model.
- Electric control box mounted on the winch and 3 dead turns detector limit switch included.
- Very low voltage control ensuring user protection against electrical risks : single speed models (BT) or speed variation models (VV) and with Dynamic Power Optimization (D.P.O).
- Thermal circuit breaker.
- 3 buttons pendant control (Wind - Unwind - Emergency Stop):
  - Removable (3 m long control cable) on BT models.
  - Not removable (3 m long control cable) on VV models.

Options
- Wire rope (m/l) and hook (see p. 86-90).
- Bottom frame.
- Tubular protection of the motor.
- Radio control.
- Other options, on request (see p. 64-70).

Strong points

- In addition to the advantages of very low voltage, the VV control allows variation of the winding speed, smooth starts and stops.
- The Dynamic Power Optimization (D.P.O) allows the variable speed drive to adjust the speed of the winch to the effort required : on request.



3 dead turns detector limit switch.

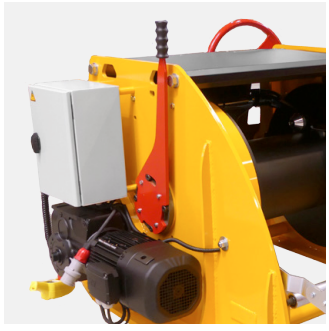

Manual drum release when no load, ergonomic and secure. Manual holding band brake.

Applications

- Fluvial, maritime.
- Industry, Public Works.
- Sites requiring great lifting heights....



Mooring of barges between them for river navigation...

Dimensions

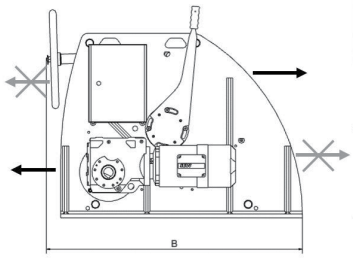

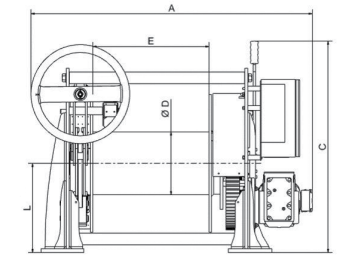

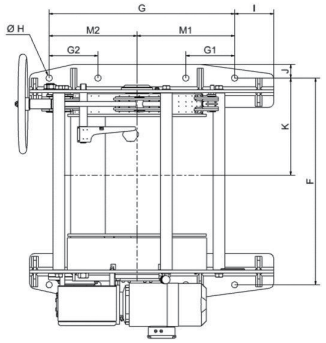

Models	TRAKZIO-R		
	2400 à 6500	10000	15000
A mm	1395 to 1528 depending on motor, on request.	1 670	1 730
B mm	1 400	1 586	1 590
C mm	1 090	1 257	1 600
Ø D mm	324	394	Ø 394
E mm (standard)	600	800	800
F mm	1 057	1 250	1 320
G mm	950	1 000	1 100
H mm	8 x Ø33	10 x Ø33	12 x Ø33
I mm	200	250	200

PRO-LIFT SOLUTIONS

COMPLETE DATA SHEET ON huchez.com

Technical characteristics

Very low voltage control, 1 speed models (BT)
600 mm standard drum (800 mm for 10 and 15 T)

References	TRAKZIO-R 2400 S		TRAKZIO-R 4200 S		TRAKZIO-R 6500 S			TRAKZIO-R 10000 S	TRAKZIO-R 15000 S
	06BT	12BT	04BT	07BT	02BT	04BT	09BT	04BT	06BT
Capacity top layer kg	1 600	1 600	2 800	2 800	4 400	4 400	4 400	7 000	10 000
Capacity 1st layer kg	**2 400**	**2 400**	**4 200**	**4 200**	**6 500**	**6 500**	**6 500**	**10 000**	**15 000**
Holding capacity t	**20**	**20**	**20**	**20**	**20**	**20**	**20**	**30**	**40**
Nb of layers	5	5	5	5	5	5	5	5	5
Maxi. Drum capacity m*	190	190	190	190	190	190	190	260	240
1st layer drum capacity m*	28	28	28	28	28	28	28	39	36
Wire rope Ø mm	20	20	20	20	20	20	20	24	26
Speed top layer m/min	6	12	4	7.5	2.5	4.5	10	4	6
Speed 1st layer m/min	5	9	3	5.5	2	3	7.5	3	4
Motor kW	2.2	4	2.2	4	2.2	4	11	5.5	11
Power	3 Ph 400V	3 Ph 400V	3 Ph 400V	3 Ph 400V	3 Ph 400V	3 Ph 400V	3 Ph 400V	3 Ph 400V	3 Ph 400V
Weight (without wire rope) kg	1015	1045	1025	1045	1055	1075	1160	Consult us	
Price €	**24 689**	**25 426**	**25 658**	**26 396**	**26 496**	**27 303**	**35 428**	**40 638**	**57 659**
Electronic load limiter - Opt.	**831**	**831**	**831**	**831**	**831**	**831**	**831**	**831**	**831**

The wire rope diameter corresponds to the capacity on the top layer with a safety coefficient of (about) 3 when pulling with wire rope.

Very low voltage control, speed variation models (VV)
600 mm standard drum (800 mm for 10 and 15 T)

References	TRAKZIO-R 2400 S			TRAKZIO-R 4200 S			TRAKZIO-R 6500 S				TRAKZIO-R 10000 S	TRAKZIO-R 15000 S
	06VV1	06VV	12VV	04VV1	04VV	07VV	02VV1	02VV	04VV	09VV	04VV	06VV
Capacity top layer kg	1 600	1 600	1 600	2 800	2 800	2 800	4 400	4 400	4 400	4 400	7 000	10 000
Capacity 1st layer kg	**2 400**	**2 400**	**2 400**	**4 200**	**4 200**	**4 200**	**6 500**	**6 500**	**6 500**	**6 500**	**10 000**	**15 000**
Holding capacity t	**20**	**20**	**20**	**20**	**20**	**20**	**20**	**20**	**20**	**20**	**30**	**40**
Nb of layers	5	5	5	5	5	5	5	5	5	5	5	5
Maxi. Drum capacity m*	190	190	190	190	190	190	190	190	190	190	260	240
1st layer drum capacity m*	28	28	28	28	28	28	28	28	28	28	39	36
Wire rope Ø mm	20	20	20	20	20	20	20	20	20	20	24	26
Speed top layer m/min	0.6-6	0.6-6	1.2-12	0.4-4	0.4-4	0.7-7.5	0.2-2.5	0.2-2.5	0.4-4.5	1-Oct	0.4-4	0.6-6
Speed 1st layer m/min	0.5-5	0.5-5	0.9-9	0.3-3	0.3-3	0.5-5.5	0.2-2	0.2-2	0.3-3	0.7-7.5	0.3-3	0.4-4
Motor kW	2.2	2.2	4	2.2	2.2	4	2.2	2.2	4	11	5.5	11
Power	1 Ph 230V	3 Ph 400V	3 Ph 400V	1 Ph 230V	3 Ph 400V	3 Ph 400V	1 Ph 230V	3 Ph 400V	3 Ph 400V	3 Ph 400V	3 Ph 400V	3 Ph 400V
Weight (without wire rope) kg	1015	1015	1045	1025	1025	1045	1055	1055	1075	1160	On request	
Price €	**27 001**	**27 001**	**28 117**	**27 970**	**27 970**	**29 088**	**28 808**	**28 808**	**29 996**	**40 905**	**43 698**	**63 137**
Electronic load limiter - Opt.	**831**	**831**	**831**	**831**	**831**	**831**	**831**	**831**	**831**	**831**	**831**	**831**

The wire rope diameter corresponds to the capacity on the top layer with a safety coefficient of (about) 3 when pulling with wire rope.

KOLOSS

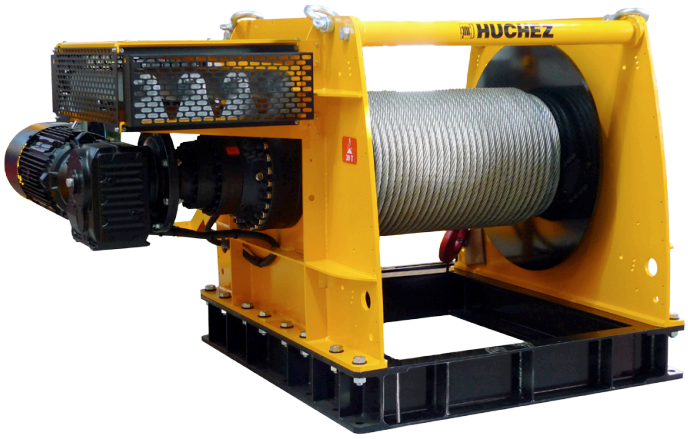

Capacity from 12 to 35 t in lifting and up to 50 t in traction/hauling.
Electrical winches with large winding capacities, designed for lifting and pulling applications of heavy loads.

- FEM 1Bm - Heavy use.
- IP 55 protection.
- Steel mechano-welded chassis shot-blasted and painted.
- Asynchronous motor. IP 55 protection.
- Automatic lack of current brake.
- Three phase 400V-50Hz power.
- Bottom frame, electrical box and braking resistors mounted on the winch. Electronic load limiter included.
- Very low voltage control (VV) ensuring user protection against electrical risks. In addition to the advantages of very low voltage, the VV control allows variation of the winding speed, smooth starts and stops.
- 3 buttons pendant control (Up - Down- Emergency Stop) not removable with potentiometer (10 m long control cable). Located in a sealed protective box fixed to the control box.

Options
- Wire rope (m/l) and hook (see p. 86-90).
- IP 55 limit switch.
- Limit switch protection.
- 10 m remotely located control box. Braking resistors mounted on a support to be fixed onto a wall.
- Rope press roller.
- Anti-friction rollers for the wire rope (horizontal, vertical).
- Rope slack switch.
- Galvanised skid.
- IP65/66 finish.
- C4 type marine paint.
- Radio control.
- Other options, on request (see p. 64-70).

Strong points

- Many wire rope exits possible.
- Robustness and reliability of Huchez mechanical parts.

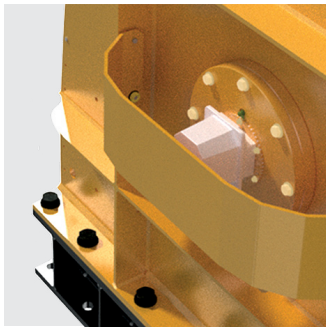

IP 55 limit switch protected by a removable plate (option).



Drum protection grids (option).

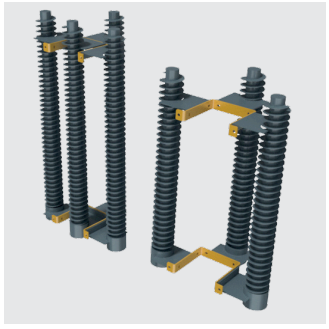

Braking resistors mounted on a support to be fixed onto a wall (option).

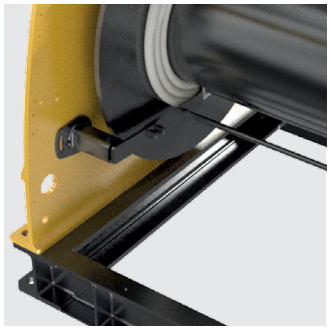

Pressure type press roller (option).

Applications

- Lifting and pulling of very heavy loads.
- Industry, Public Works.



Cofferdam lifting winch.



Use on a shipyard.

PROLIFT SOLUTIONS

COMPLETE DATA SHEET ON huchez.com

Dimensions

Weight: on request.

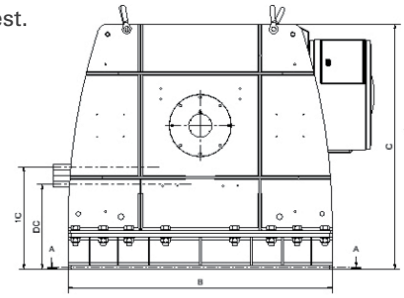

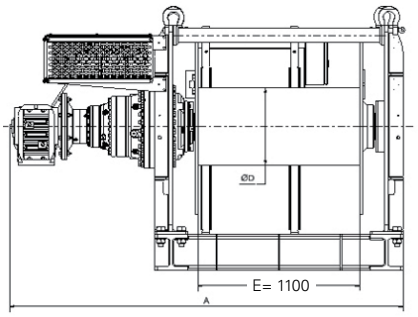

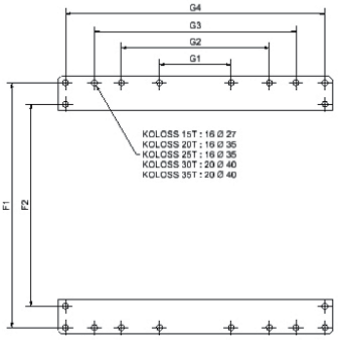

Models	KOLOSS 12 D		KOLOSS 15		KOLOSS 17 D		KOLOSS 20		KOLOSS 20 D		KOLOSS 25		KOLOSS 25 D		KOLOSS 30		KOLOSS 30 D		KOLOSS 35	
	VV9	VV18	VV7	VV14	VV6	VV12	VV5	VV10	VV4	VV7	VV3	VV6	VV4	VV8	VV3	VV7	VV3	VV8	VV3	VV6
A mm	2 345	2 380	2 345	2 380	2 447	2 466	2 447	2 466	2 548	2 567	2 548	2 567	2 653	2 694	2 653	2 694	2 739	2 779	2 739	2 779
B mm	1 780	1 919	1 780	1 919	1 905	2 044	1 905	2 044	1 905	2 044	1 905	2 044	1 955	2 094	1 955	2 094	1 955	2 094	1 955	2 094
C mm	13 60	1 360	1 360	1 360	1 560	1 560	1 560	1 560	1 560	1 560	1 560	1 560	1 665	1 665	1 665	1 665	1 665	1 665	1 665	1 665
ØD mm	405	405	405	405	470	470	470	470	521	521	521	521	521	521	521	521	559	559	559	559
F1 mm	1 529	1 529	1 529	1 529	1 529	1 529	1 529	1 529	1 529	1 529	1 529	1 529	1 605	1 605	1 605	1 605	1 605	1 605	1 605	1 605
F2 mm	-	-	-	-	-	-	-	-	-	-	-	-	1 325	1 325	1325	1 325	1 325	1 325	1 325	1 325
G1 mm	190	190	190	190	240	240	240	240	240	240	240	240	470	470	470	470	470	470	470	470
G2 mm	570	570	570	570	700	700	700	700	700	700	700	700	920	920	920	920	920	920	920	920
G3 mm	950	950	950	950	1 200	1 200	1 200	1 200	1 200	1 200	1 200	1 200	1 320	1 320	1 320	1 320	1 320	1 320	1 320	1 320
G4 mm	1 330	1 330	1 330	1 330	1 600	1 600	1 600	1 600	1 600	1 600	1 600	1 600	1 700	1 700	1 700	1 700	1 700	1 700	1 700	1 700

Technical characteristics

References	KOLOSS 12 D		KOLOSS 15		KOLOSS 17 D		KOLOSS 20		KOLOSS 20 D	
	VV9	VV18	VV7	VV14	VV6	VV12	VV5	VV10	VV4	VV7
Capacity top layer kg	**12 000**	**12 000**	**15 000**	**15 000**	**17 000**	**17 000**	**20 000**	**20 000**	**20 000**	**20 000**
Capacity 1st layer kg	20 700	20 700	20 700	20 700	25 000	25 000	25 000	25 000	31 000	31 000
Nb of layers	7	7	4	4	5	5	3	3	6	6
Maxi. Drum capacity m*	520	520	240	240	340	340	160	160	440	440
1st layer drum capacity m*	50	50	45	45	50	50	45	45	50	50
Wire rope Ø mm	26	26	28	28	30	30	32	32	32	32
Speed top layer m/min	1-9.5	1.8-18.3	0.8-7.7	1.4-14.8	0.7-6.6	1.2-12.7	0.6-5.6	1-10.8	0.4-4	0.7-7.6
Speed 1st layer m/min	0.6-5.4	1-10.6	0.6-5.5	1-10.7	0.5-4.4	0.8-8.6	0.5-4.5	0.8-8.6	0.3-2.5	0.5-4.9
FEM	1Bm	1Bm	1Bm	1Bm	1Bm	1Bm	1Bm	1Bm	1Bm	1Bm
Motor kW	22	37	22	37	22	37	22	37	22	37
Power	3 Ph - 400 V	3 Ph - 400 V	3 Ph - 400 V	3 Ph - 400 V	3 Ph - 400 V	3 Ph - 400 V	3 Ph - 400 V	3 Ph - 400 V	3 Ph - 400 V	3 Ph - 400 V
Price €	**On request.**									

References	KOLOSS 25		KOLOSS 25 D		KOLOSS 30		KOLOSS 30 D		KOLOSS 35	
	VV3	VV6	VV4	VV8	VV3	VV7	VV3	VV8	VV3	VV6
Capacity top layer kg	**25 000**	**25 000**	**25 000**	**25 000**	**30 000**	**30 000**	**30 000**	**30 000**	**35 000**	**35 000**
Capacity 1st layer kg	31 000	31 000	41 000	41 000	43 000	43 000	50 000	50 000	50 000	50 000
Nb of layers	3	3	6	6	4	4	6	6	4	4
Maxi. Drum capacity m*	160	160	400	400	220	220	390	390	210	210
1st layer drum capacity m*	45	45	45	45	40	40	40	40	40	40
Wire rope Ø mm	36	36	36	36	40	40	40	40	42	42
Speed top layer m/min	0.4-3.2	0.6-6.2	0.5-4.1	0.8-8	0.4-3.6	0.7-7	0.4-3.8	0.7-7.4	0.4-3.3	0.6-6.3
Speed 1st layer m/min	0.3-2.5	0.5-4.9	0.3-2.5	0.5-4.8	0.3-2.5	0.5-4.8	0.3-2.3	0.5-4.8	0.3-2.3	0.5-4.5
FEM	1Bm	1Bm	1Bm	1Bm	1Bm	1Bm	1Bm	1Bm	1Bm	1Bm
Motor kW	22	37	22	37	22	37	22	37	22	37
Power	3 Ph - 400 V	3 Ph - 400 V	3 Ph - 400 V	3 Ph - 400 V	3 Ph - 400 V	3 Ph - 400 V	3 Ph - 400 V	3 Ph - 400 V	3 Ph - 400 V	3 Ph - 400 V
Price €	**On request.**									

The wire rope diameter corresponds to the capacity on the top layer with a safety coefficient of (about) 5 when lifting with non-rotating wire rope.

EQUIPEMENT IN OPTIONS

TO KNOW

Lifting is a load moving operation requiring, at a given time, a level change. (MD 2006/42/EC).

Pulling is a horizontal displacement operation of loads. In the event the traction stops, no load movement takes place. (NF EN 14492-1:2016 Standard).

Note: Pulling on a slope is considered as lifting.

European directives and **standards** applicable to lifting and handling equipment are as follow:

- The Machine Directive 2006/42/EC.
- The FEM 1.001 1998 Standard.
- The standards from serie 13000.
- The NF EN 14492-1 and 2 standards.

Check out

NEW



Trestles for TRBoxter 300 and 500 kg winches

Ideal for work on terrace, on stories or on the ground...

Dismountable in 8 elements, these trestles are easy to install on work sites.

Galvanised finish.

To use with counterweight made of 32 steel weights of 25 kg each.

Specific TRBoxter winches on trolley.

ON REQUEST

Chassis options

NEW



Dynamometric chassis for TRBoxter winch

Real time load display and built-in load limiter.



Site chassis for high capacity winches

Ground fixation for easier installation and manipulation.



Specific chassis for telescopic trolley

Easy handling thanks to the slots for the forks.

NEW

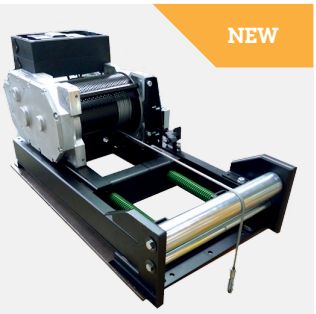

Load limitation chassis

A fixed and a mobile chassis detecting the load. The setting is more precise that the « classic » load limiter.



Chassis for TRBoxter winches

This tubular protection frame is specially designed for construction sites and public works. It has a document holder and a standard site electric socket. Fixation and ballasting thanks to the sleeves in the lower part.

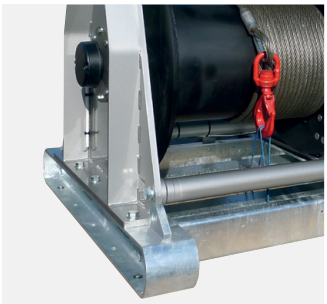

Skid

Specially designed for construction sites and public works. Galvanised finish. Fixation on the ground or by slinging.

	In lifting situation	In pulling situation
Dynamometric chassis for TRBoxter winch	Optional	Optional
Load limitation chassis	Optional	Optional
Specific chassis for telescopic trolley	Optional	Optional
Site chassis for high capacity winches	Optional	Optional
Chassis for TRBoxter winches	Optional	Optional
Skid	Optional	Optional

COMPLETE DATA SHEET ON huchez.com

Security options

TO KNOW

According to Machine Directive MD 2006/42/EC, are mandatory on electric winches:

- The emergency stop,
- The limit switch (in lifting),
- The load limiter (from 1 t).

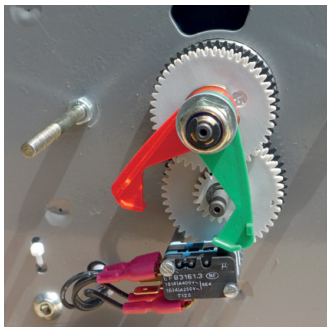

Limit switch

Clock type: specially designed by Huchez with 2 positions. This easy to adjust system provides security by preventing upper and lower overruns.



Limit switch

Cam type: 2, 4, 6 or 8 positions possible. IP 66. Encoder option also possible.



Fitted pulley

The pulley with effort detection electrically cuts the winch as soon as there is an overload. (Up to 25% above the nominal load). The devise acts as a simple switch. (see p. 101).



Centrifugal brake

It controls the lowering speed in case of failure of the motor or the automatic brake.

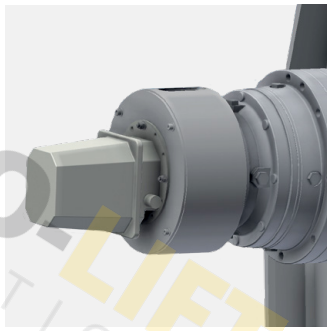

Secondary security brake

This option increases the safety lifting level. It is mandatory in applications related to stage equipment, people lifting and load lifting above people (here with a cam type limit switch).

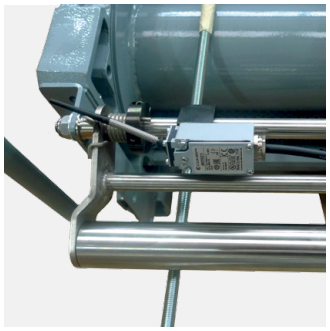

Rope slack switch

This devise automatically stops the winch when unwinding if the wire rope is not tensioned. For example: when lowering and the loads meets an obstacle or in traction.



Electronic load limiter

This devise stops the winch in case of overload without breaking the kinematic chain. It is mandatory in lifting from 1000 kg (Directive 2006/42/EC) to avoid cable breakage, structure deformation and therefore accidents resulting from problems due to overloads.

	In lifting application	In pulling application
Limit switch	Mandatory	Optional
Fitted pulley	Possible up to 1.5 t.	Recommended (possible up to 1.5 t).
Centrifugal brake	Optional (only available for the INDUSTRIA range).	-
Secondary security brake	Compulsory for stage equipment D8+C1.	-
Rope slack switch	Optional	Optional
Electronic load limiter	Mandatory from 1 t.	As per NF EN 14492-1: 2016 standard, compulsory in some case : check with us

OPTIONAL EQUIPMENT

Cable winding options

TO KNOW

Winding cable must always be carried out under tension (in lifting: counterweights are mandatory see p. 94).



Rope press roller

Allows an orderly winding of the rope on the drum. Essential complement to the grooved drum used on a single layer and in the case where the rope is not permanently tensioned (no load winding in traction). Not recommended if the rope is wound on several layers. Mandatory with a two-way system.

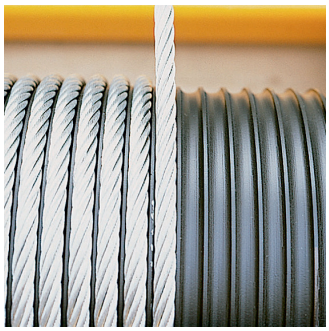

Grooved drum

It facilitates the correct winding of the rope on the first layer. Essential for installing a two-way system.
See “Winding the cable around the drum” p. 96-99.



Rope slack switch

This devise automatically stops the winch when unwinding when the wire rope is not tensioned. For example: when lowering and the loads meets an obstacle or in traction.

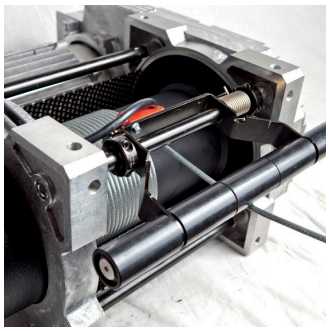



Multi cables drum

Allows lifting a load with several ropes, lifting several loads, or making a two-way system.



Drum with additional flange

Allows several layers to be wound with 2 ropes.

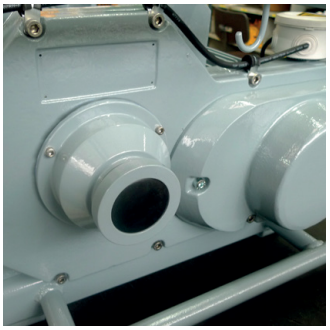

Releasable drum

Very useful for manual unwinding of the rope over a long distance (pulling applications only).



Drum length on request

COMPLETE DATA SHEET ON huchez.com



Rocking winch

System allowing an efficient winding of the rope around the drum of the TRBoxter winches (lifting applications only).



Counterweight

Used to maintain a minimum tension in the rope during its use.



Encoders

Encoder offering multiple possibilities (synchronization, altimetry measurement ...).

	In lifting application	In pulling application
Rope press roller	Optional	Essential to prevent the loosening of the rope on the drum.
Grooved drum	Optional	Optional
Rope slack switch	Optional	Optional
Multi cable drum	Optional	Optional
Drum with additional flange	Optional	Optional
Releasable drum	-	Optional
Drum length on request	Optional	Optional
Rocking winch	Optional	-
Counterweights	Mandatory to wind under tension.	-
Encoders	Optional	Optional

PRO-LIFT SOLUTIONS

OPTIONAL EQUIPMENT

Control options



Wrist mounted radio control

PLd safety level. Range 50 to 100 m. IP 65. Li-Po (3.7 V) battery. Frequency 868 MHz or 433 MHz. – Keeps your hands free.



Pulling radio control

Pulling only. Range 100 m in open areas. Also available in long range versions 500 m in open areas. Frequency 2.4 GHz. IP 65.



Adjustable speed drive pulling radio control

Pulling only. Adjustable speed drive version. Range 100 m in open areas. Also available in long range versions 500 m in open areas. Frequency 2.4 GHz. IP 65.



Lifting radio control

SIL3/PLe safety level. Range 400 m in open areas. Available in adjustable speed drive version. Frequency 433 MHz. IP 65. Lithium-ion battery. Available options: data feedback on display screen, frequency 2.4 GHz...



Proportional adjustable speed drive lifting radio control

SIL3/PLe safety level. Range 400 m in open areas. IP 66. Lithium-ion battery. With proportional buttons for adjustable speed drive management and data feedback display screen.



Centralised control box

For the use of multiple winches with a single control box.



Remotely located control box

To position the control box when the winch is not accessible.



Double glass door control box

Protects buttons and controls.



Special controls

Made on request as per customer's specifications.

	In lifting application	In pulling application
Wrist mounted radio control	Optional	Optional
Pulling radio control	-	Optional
Adjustable speed drive pulling radio control	-	Optional
Lifting radio control	Optional	-
Proportional adjustable speed drive lifting radio control	Optional	-
Centralised control box	Optional	Optional
Remotely located control box	Optional	Optional
Double glass door control box	Optional	Optional
Special controls	Optional	Optional

COMPLETE DATA SHEET ON huchez.com

Motor options



Brake release

Allows to manually open the brake and lower the load in case of power failure.



Trouble shooting hand wheel

Coupled with the brake release, allows to lower, or precisely position a load.

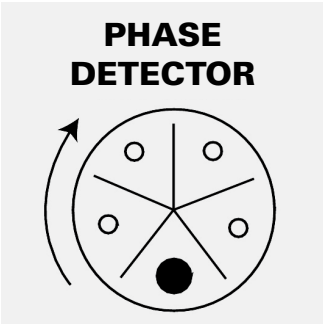

Phase detector

Prevents inversion of the Up and Down when connecting the winch.

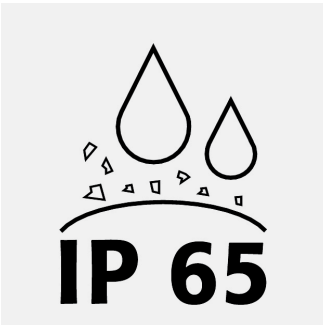

IP65 protection

Motor brake, remotely located control box, cam type limit switch.



Specific motors, specific tensions…

Made on request as per customer's specifications.

	In lifting application	In pulling application
Brake release	Optional	Optional
Trouble shooting hand wheel	Optional	-
Phase detector	Optional	Optional
IP65 protection	Optional	Optional
Specific motors, specific	Optional	Optional

PRO-LIFT SOLUTIONS

OPTIONAL EQUIPMENT

Protection options



Special paint

C5M type with certificate: for use in marine/offshore sectors.
C4 type: for use in harsh environments.



Tarpaulin cover

On customer's specification only.
On request.



Rain cover

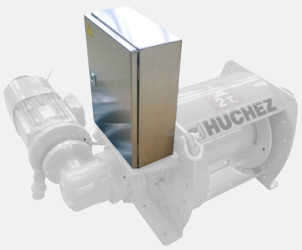

316L stainless steel control box

Recommended for use in harsh environments.

	In lifting application	In pulling application
Specific paint	Optional	Optional
Tarpaulin cover	Optional	Optional
Rain cover	Optional	Optional
316L stainless steel control box	Optional	Optional

Accessories

TO KNOW

Our winches are offered, unless stated differently, without wire rope and hook.

A choice of stainless steel, non-rotating galvanised, standard galvanised, high resistance wire ropes as well as textile ropes is available.

Once defined with our sales advisers, the wire rope can be either wound onto the drum or supplied separately.

You can also choose between smooth cable ends, equipped with a sleeved thimble loop or with a sleeved thimble loop and hook. A selection of hooks and other accessories (diverting pulleys...) is available on p. 85-94.



Wire ropes and hooks

All information on p. 85-90.



Fixed pulleys with support plates

All information on p. 92.

	In lifting application	In pulling application
Wire ropes and hooks	Optional	Optional
Fixed pulleys with support plates	Optional	Optional

COMPLETE DATA SHEET ON huchez.com

FORESTBOX

NEW

Pulling capacity from 400 to 1800 kg.
Lightweight portable capstan winches, for forestry professionals, fire departments, rescue operation and the construction sector.

- Aluminum frame and housing with fixation ring.
- 1 speed model (up to 1200 kg) or 2 speeds (1800 kg).
- 4 stroke Honda air-cooled motor or 2 stroke Active motor depending on model.
- Illimited rope length.

Options
- Textile rope with thimble (m/l or kit) and hook.
- Sheave for doubling the capacity.
- Sling.
- Shackle.
- Soft shackle.
- Diverting pulley.
- Choker chain.
- Transport bag.



FORESTBOX 1200

Dimensions

Models	FORESTBOX 400	FORESTBOX 500	FORESTBOX 1200	FORESTBOX 1800
L x P x h mm	340 x 420 x 350	330 x 290 x 260	370 x 330 x 340	385 x 365 x 325

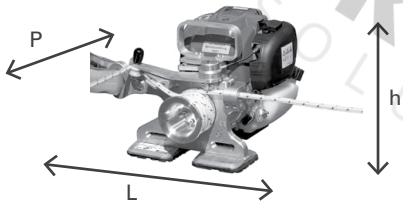

Strong points

- Compact and light
- Safely usable from a distance by pulling on the rope.
- Centrifugal clutch: the capstan-winch continue to operate on idle which prevents unintentional rotation.
- Locking cleat brake preventing any backward movement of the load.



On the 1800 kg model, using the gear shift, the ratio between power and speed can be adjusted as the situation demands.



Many accessories in option.

Applications

- Pull heavy loads (wood...) in places that cannot be accessed by heavy machineries.
- Rescue of stuck vehicles.
- Pulling construction materials, pulling cables or pipes.

Technical characteristics

References	FORESTBOX 400	FORESTBOX 500	FORESTBOX 1200	FORESTBOX 1800
Capacity kg	**400**	**500**	**1 200**	**1 800**
Motor kW	3,3	1,1	3,3	3,3
Gear	1 gear	1 gear	1 gear	2 gears
Speed m/min	40	12	14	12 / 24
Textile rope Ø mm	8 to 9,5	8 to 12	8 to 9,5	12 to 14
Weight kg	12	8,5	13	14
Price €	**1 874**	**1 874**	**1 874**	**2 827**
Transport bag - Opt.	**62**	**62**	**62**	**62**
Hook- Opt.	**75**	**75**	**75**	**75**
Textile rope, m - Opt.	**4**	**4**	**4**	**7**
Thimble Eye - Opt.	**50**	**50**	**50**	**50**
Textile rope with wire thimble, 50 m kit - Opt.	**257**	**257**	**257**	**356**
Textile rope with wire thimble, 100 m kit - Opt.	**413**	**413**	**413**	**643**
Sling - Opt.	**41**	**41**	**41**	**41**
Shackle - Opt.	**7**	**7**	**7**	**7**
Soft shackle- Opt.	**41**	**41**	**41**	**41**
Pulley - Opt.	**61**	**61**	**61**	**84**
Choker chain - Opt.	**97**	**97**	**97**	**97**

TS/TD



Pulling capacity from 500 to 5000 kg.
Petrol winches (TS) or diesel winches (TD) for all pulling applications on site where electric power is not or hardly available.

- Chassis and drum with large flanges in mechano-welded steel.
- Petrol or diesel motor from 4.2 to 7.6 HP depending on models.
- Disk brake.
- All controls are made by a single lever. When the operator releases the lever, the lever automatically returns to the brake position.
- Other drum sizes (300 or 900 mm) on request.

Options Wire rope (m/l or kit) and hook (see p. 86-90).
Limit switch (TS model).

Strong points

- Reduced maintenance, limited to changing the oil and lubricating the reduction gear every 500 hours of use or once a year.
- Autonomous, quick to implement.

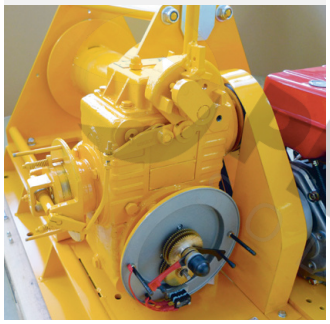

Reducer – reverser – Brake.

Applications

- Public works.
- Construction sites...

Dimensions

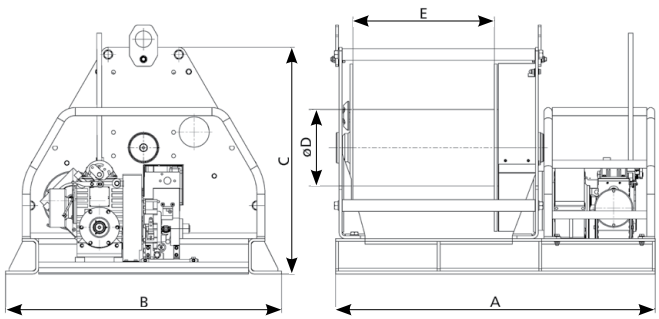

Models	TS - TD			
	500 kg	1000 kg	2000/3000 kg	5000 kg
A mm	1 321	1 321	1 375	1 480
B mm	845	845	1 170	1 170
C mm	645	645	1 000	1 030
Ø D mm	203	203	324	324
E mm (standard)	600	600	600	600

Technical characteristics

References	500 TS 24	1000 TS 12	2000 TS 6	3000 TS 4	5000 TS 3
Capacity top layer kg	500	1 000	2 000	3 000	5 000
Capacity 1st layer kg	**595**	**1 300**	**2 410**	**3 830**	**6 575**
Nb of layers	4	4	4	4	4
Maxi. Drum capacity m	253	219	239	182	163
1st layer drum capacity m	56	48	52	37	33
Wire rope Ø mm	7	8	11.5	15.8	18
Speed m/min	24	12	6	4	2
Motor HP	6	6	6	6	7
Weight (without wire rope) kg	225	325	810	815	1 090
Price €	**8 896**	**11 225**	**16 801**	**17 401**	**23 929**

References	500 TD 16	1000 TD 8	2000 TD 4	3000 TD 3	5000 TD 3
Capacity top layer kg	500	1 000	2 000	3 000	5 000
Capacity 1st layer kg	**664**	**1 300**	**2 400**	**3 830**	**6 400**
Nb of layers	4	4	4	4	4
Maxi. Drum capacity m	253	253	239	182	163
1st layer drum capacity m	56	56	52	37	33
Wire rope Ø mm	7	8	11,5	15,8	18
Speed m/min	17	8	4	3	3
Motor HP	4.2	4.2	4.2	4.2	7.6
Weight (without wire rope) kg	230	330	815	820	1 145
Price €	**10 660**	**13 060**	**18 636**	**19 732**	**27 919**

The wire rope diameter corresponds to the capacity on the top layer with a safety coefficient of (about) 3 when pulling with non-rotating wire rope.

COMPLETE DATA SHEET ON huchez.com



GANTRY CRANES AND JIB CRANES



The support of the jib crane (wall or column) must be strong enough to support the efforts. Verification of the strength of the support intended to receive the bracket, depending on the horizontal and vertical reactions increased by the coefficients in force, is the responsibility of the user.

Equipment delivered with EC or partly completed machine declaration of conformity and user manual.

Lifting.

Maxi. Capacity.

Rotation angle.

IN OUT IN OUT

Indoor use, outdoor use, indoor/outdoor use.

Weights, dimensions, installation : consult us

915



Capacity from 500 kg to 5 t.
Steel gantry crane movable only with no load.

- Square tube legs and IPE profile beam.
- Robust mechanically welded construction.
- Assembly with galvanised screws.
- Rotation 360°.
- Gantry crane equipped with 4 swivel wheels on bearings.
- Glycerophtalic lacquer finish (yellow RAL 1028).

Options
- Manual push trolley.
- Manual or electric hoist (on manual push trolley only).
- Locking wheels.
- Galvanised finish.

Strong points

- Easy to set up.
- Dismantlable in 7 elements, delivered in a bundle (saving on transport cost).

Applications

- All works in a cars, trucks maintenance workshop.
- Setting up of a lifting point.



Load handling in a workshop.



Load handling in a clean room.



Outdoor works (specific make).



Load lifting on a restoration site.

Technical characteristics

References	915																	
Capacity kg	**500**	**500**	**500**	**1 000**	**1 000**	**1 000**	**1 500**	**1 500**	**1 500**	**2 000**	**2 000**	**2 000**	**3 000**	**3 000**	**3 000**	**5 000**	**5 000**	**5 000**
Span m	3	4	5	3	4	5	3	4	5	3	4	5	3	4	5	3	4	5
Height under beam m	3 / 3.5 / 4 / 4.5 / 5																	
Weight kg	On request																	
Price €																		
Height under beam 3 m	**On request**																	
Height under beam 3.5 m	**On request**																	
Height under beam 4 m	**On request**																	
Height under beam 4.5 m	**On request**																	
Height under beam 5 m	**On request**																	
Set of 2 additional wheels - Opt.	**On request**																	

COMPLETE DATA SHEET ON huchez.com

STEEL WORKSHOP GANTRY CRANES
919

Capacity from 500 kg to 5 t. Steel gantry crane movable under load, over smooth clean floors.

- Square tube legs and IPE profile beam.
- Robust mechanically welded construction.
- Assembly with galvanised fittings.
- Rotation 360°.
- Gantry crane equipped with 4 swivel wheels in white polyamide or polyurethane bandage depending on models.
- Polyurethane finish (yellow RAL 1028).
- Other spans: on request.

Options
- Manual push trolley.
- Manual or electric hoist (maximum lifting speed 16 m/min.).
- Non swivel wheels or locking wheels.
- Power feeding line.
- Lockable switch.
- Galvanised finish.
- Outdoor use.



Strong points

- Dismantlable in 3 parts.
- Easy to set up.

Applications



All works in a cars, trucks maintenance workshop.



Load lifting in a school.

Technical characteristics

References	919																	
Capacity kg	**500**	**500**	**500**	**1 000**	**1 000**	**1 000**	**1 600**	**1 600**	**1 600**	**2 000**	**2 000**	**2 000**	**3 200**	**3 200**	**3 200**	**5 000**	**5 000**	**5 000**
Span m	3	4	5	3	4	5	3	4	5	3	4	5	3	4	5	3	4	5
Height under beam m	3 / 3.5 /4 / 4.5 / 5																	
Price €																		
Height under beam 3 m	**On request**																	
Height under beam 3.5 m	**On request**																	
Height under beam 4 m	**On request**																	
Height under beam 4.5 m	**On request**																	
Height under beam 5 m	**On request**																	
Set of 2 additional wheels - Opt.	**On request**																	

917



Réf. 917
500 kg

Capacity from 150 to 500 kg. Light galvanised jib cranes for wastewater treatment plants...

- Folded steel sheet column and arm, steel tube base.
- Rotation 360°.
- Galvanised finish.
- Ground fixation or wall mounted with the specific base (option).

Options
- Wall mounted base.
- Anti-rotation kit.
- Hand winches (631.AFL p.26, MANIBOX GR p.22, TIREX p.20, PULLEY-MAN p.30) or electric winches (MOTORBOX BT p.32) : jib crane equipped with a winch, on request.

Strong points

- Rotation of the jib crane with retractable lever.
- Adjustment of the span with the holes in the jib crane's arm.

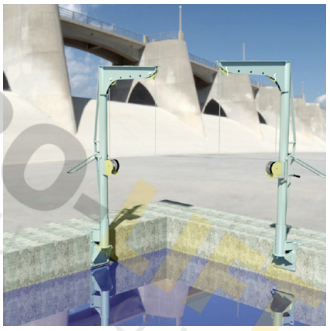

Wall mounted base (option).

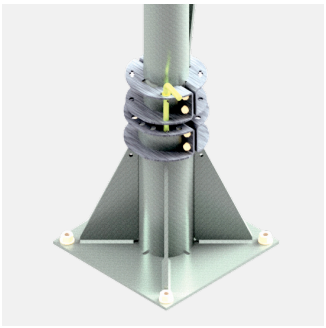

Anti-rotation kit to block the jib crane (option).

Applications

- Wastewater treatment plants.
- Water retention basins.



Load lifting (ref. 150 kg).



Jib crane with manual winch TIREX.



Jib crane with manual winch MANIBOX and wall mounted base.



Water treatment plant.

Technical characteristics

References	917		
Capacity kg	**150**	**300**	**500**
Overall height m	2.3	2.5	2.5
Maxi. Span m	0.8	1	1
Weight kg (jib crane/base)	22/7	55/30	77/30
Price €			
Jib crane (with pulley and base)	**975**	**1 594**	**1 665**
Jib crane equipped with a winch	**On request**		
Base only	**391**	**690**	**690**
Wall mounted base - Opt.	**498**	**898**	**898**
Anti-rotation kit - Opt.	**198**	**212**	**212**

COMPLETE DATA SHEET ON huchez.com

PERSONNEL LIFTING



Equipment approved by APAVE and providing all the necessary security for lifting people.
Complies with the European Machine Directive 2006/42/EC.

Equipped delivered with EC declaration of conformity and user manual.

Lifting.

Solicitation level.

MAX
Maxi. capacity.

IN OUT
Indoor/outdoor use.

SECURITREUIL



Capacity 125 kg.
Equipment designed to safely lower people up to 70 m during maintenance visits in silos, bridge piers... Operation must be carried out by 2 people.

- Moderate use.
- Rigid structure in mechano-welded steel.
- Seat in mechano-welded steel tube with protective hoop, anatomical seat, safety belt and retractable footrest.
- Asynchronous motor.
- Automatic lack of current brake.
- Three phase 400V-50Hz (3 Ph-230V on request).
- Limit switches (up, down and over limits), load limiter and wire ropes (high resistance non rotating galvanised wire rope) included.
- Very low voltage control ensuring user protection against electrical risks
- Control box:
  - 2 buttons (Up -Down) not removable (2 m long control cable) for the operator monitoring the equipment.
  - 3 buttons (Up -Down -Emergency stop) not removable (25 m long control cable) with reel (ref. SCT25E CE) or with radio control (ref. SCT25RC CE, SCT50RC CE and SCT70RC CE) for the operator on the seat.

Dimensions

Dimensions in mm. Weight : 330 kg.

Passage of the seat :

- Square : 600 mm width mini.
- Circular : Ø 800 mm mini. (700 mm with another seat, on request).

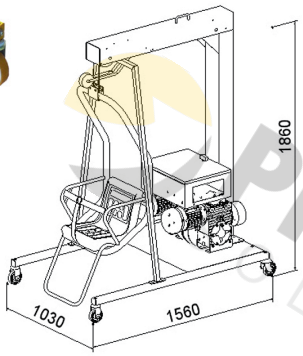

Strong points

- Lower limit switch. Automatic lack of current brake (in case of power failure, the winch automatically stops, brakes applied).
- Upper limit switch and over limit.
- Horizontal cylinders with spirit level. 4 wheels, 2 swivelling with locking mechanism enabling to move and immobilise the equipment easily.

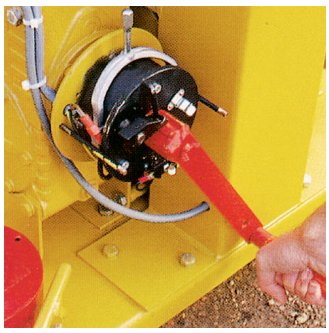

Trouble shooting crank handle and brake release.



Two independent wire ropes with a breaking load of 1600 kg each (safety coefficient equal to 10).



Two independent winches : one ensures the lifting function, the other the fall protection function. Both winches are synchronized.



Operator radio control box (ref. SCT25RC, SCT50RC et SCT70RC).

Technical characteristics

References	SCT25E CE	SCT25RC CE	SCT50RC CE	SCT70RC CE
Capacity kg	**125**	**125**	**125**	**125**
Working height m	25	25	50	70
Speed m/min	9	9	9	9
Motor kW	0.75	0.75	0.75	0.75
Power	3 Ph - 400 V	3 Ph - 400 V	3 Ph - 400 V	3 Ph - 400 V
Weight kg	330	330	330	330
Price €	**21 564**	**22 021**	**22 264**	**22 509**

PRO-LIFT SOLUTIONS

COMPLETE DATA SHEET ON huchez.com



SITE LIFTING



Equipment delivered with EC or partly completed machine declaration of conformity and user manual.

Lifting.

Maxi. capacity.

Solicitation level.

IN OUT IN OUT

Use indoor, outdoor, indoor/outdoor.

Equipment available on ARCHIMEDE platform.

CT4



Capacity from 500 to 1000 kg.
Aluminum telescopic tripods designed to be equipped with a winch (manual or electric), ideal for working on construction sites or in underground work in the absence of an upper anchor point.

- Independently adjustable aluminium legs (160 mm step).
- Cast aluminum head equipped with a removable pulley.
- Articulated feet with 2 positions to adapt to the type of ground: spade tip (loose ground) or flat shoe (smooth and fragile ground).
- Fixation plate on double leg as well as three independent textile safety straps with carabiner to control the correct spacing of the feet included.

Options
- Scalable kit (independent straps, fixing plate and offset pulley).
- Spurgear hand winch (MANIBOX GR500/1000, see p. 22-23) or electric (TRBoxter 250/350/500, see p. 36).

Strong points



- Fixation plate to easy the installation of the winch.
- Space-saving folded, telescopic and light.
- Their aluminum structure gives them solidity and high resistance to corrosion.



- Easily removable pulley to avoid dismounting the feet when passing the cable before each use.

Dimensions

L = 2.78 m for 500 kg
(in 3 m height) and 1000 kg models.

L = 3.78 m for 500 kg
(in 4 m height) model.

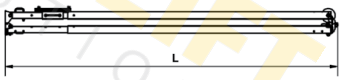

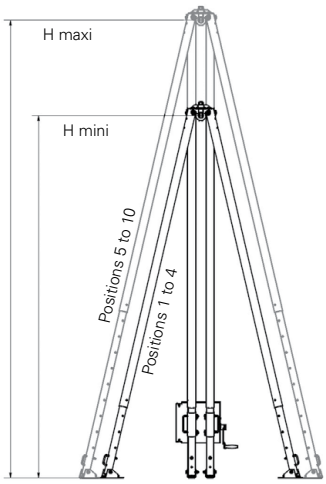

Applications

- Road works, underground networks...

Technical characteristics

References	CT4 500 3	CT4 500 4	CT4 500 3	CT4 500 4	CT4 1000	CT4 1000
Capacity kg	**250/350/500**	**250/350/500**	**500**	**500**	**1 000**	**1 000**
Lifting height m	56/56/42	56/56/42	18	18	56	30
Head height (mini. - maxi.) m	2-3	3-4	2-3	3-4	2-3	2-3
Required circle Ø to position the feet (pos. 1 to 4 - pos. 5 to 10) m	2.00-2.30	2.90-3.45	2.00-2.30	2.90-3.45	2.00-2.30	2.00-2.30
Weight (without winch or fixation plate) kg	56	69	56	69	56	56
Winch in option	Electric TRBoxter 250/350/500. 1Ph-230 V see p. 32-37	Electric TRBoxter 250/350/500. 1Ph-230 V see p. 32-37	Manual Manibox GR 500 see p. 20-21	Manual Manibox GR 500 see p. 20-21	Electric TRBoxter 500 mouflé. 1Ph-230 V see p. 32-37	Manual Manibox GR 1000 see p. 20-21
Price €	**2 871**	**3 369**	**2 871**	**3 369**	**3 175**	**3 175**

COMPLETE DATA SHEET ON huchez.com

CT3

Capacity from 250 to 3000 kg.
Aluminum telescopic tripods designed to be equipped with a hoist (manual or electric), ideal for working on construction sites or in underground work in the absence of an upper anchor point.

- Independently adjustable aluminum legs (100 mm step on 250 kg model, 160 mm on models from 500 kg).
- Steel head on 250 kg model, aluminum cast on 500 and 1000 kg models.
- Articulated feet with two (models from 500 kg) or three positions (250 kg model) to adapt to the ground: Spade tip (loose ground), flat shoe (hard ground) or notched shoe (slippery ground).
- Three independent textile safety straps with carabiner to control the correct spacing of the feet (from 500 kg models) included.

Options ▷ Manual or electric chain hoist.



Ref. CT3 250 kg, flat shoe position (hoist in option).

Dimensions

L = 2.30 m for 500 kg (in 3 m height) and 1000 kg models.

L = 3.30 m for 500 kg (in 4 m height), 2000 kg and 3000 kg models.

L = 1.56 m for 250 kg model.

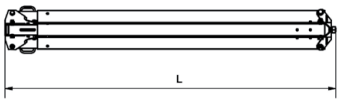

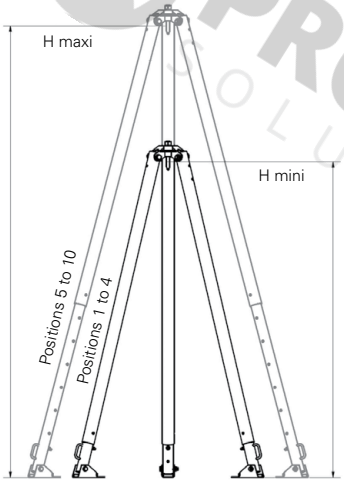

Strong points

- Space-saving folded, telescopic and light. Legs with handles.
- Their aluminum structure gives them solidity and high resistance to corrosion.



Flat shoe position (ref. CT3 500 kg).



Notched shoe position / spade tip position.



Various anchoring points: fitting of pulleys, hook for sheaving...

Applications

- Road works, underground networks...

Technical characteristics

References	CT3					
Capacity kg	**250**	**500**	**500**	**1 000**	**2 000**	**3 000**
Head height (mini. - maxi.) m	1.40 - 2	2 - 3	3 - 4	2 - 3	3 - 4	3 - 4
Required circle Ø to position the feet (pos. 1 to 4 - pos. 5 to 10) m	de 1.30 à 1.60	2.00 - 2.30	2.90 - 3.45	2.00 - 2.30	2.90 - 3.45	2.90 - 3.45
Weight kg	25	45	55	45	120	120
Price €	**1 300**	**1 626**	**1 987**	**1 626**	**3 402**	**3 402**

JACKS



Equipment delivered with EC declaration of conformity and user manual.

Lifting.

Maxi. capacity.

Indoor / outdoor use.

Stainless steel range.

Equipment available on ARCHIMEDE platform.

CABLE REEL JACKS
756

Dimensions

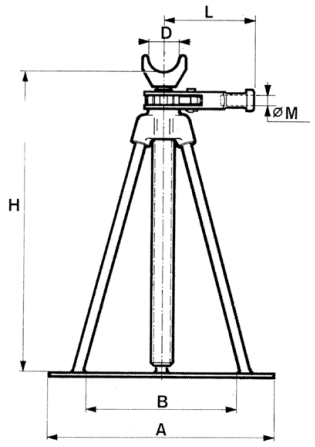

Capacity from 2 to 4 t.
Cable reel jacks used by two allowing to easily unwind reels of cable (electric or steel).

- Robust design.
- Handle with sheath for operating lever.
- Up and Down reversible retaining pawl.

Applications

- Cable companies, electricians...
- Public Works, telecoms...

Strong points

- Stable and easy to implement.
- Carrying bar necessary to lift the reels (not supplied).



Models	756			
	2	3	3 H	4
A mm	280	450	720	600
D mm	64	84	84	84
Ø M mm	25	25	27	27

Technical characteristics

References	756			
	2	3	3 H	4
Capacity t	**2**	**3**	**3**	**4**
Height mm (H)	320	520	950	820
Stroke mm	200	340	620	620
Weight kg	9,5	24	54	50
Price €	**700**	**1 111**	**1 218**	**1 286**

SCREW JACKS
743

Dimensions

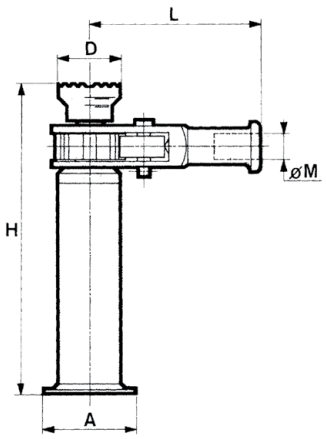

Capacity from 2 to 20 t.
Screw jacks used to lift load on a small stroke, to level heavy loads...

- Robust design.
- Handle with sheath for operating lever.
- Up and Down reversible retaining pawl.

Applications

- Industry, Public Works....
- Levelling of heavy load.
- Working on parts.
- Lifting loads.

Strong points

- Stable and easy to implement.



Models	743					
	2	5	10	15	20	20H
Ø A mm	80	120	175	200	230	320
Ø D mm	60	80	95	95	110	110
L mm	165	165	240	240	290	290
Ø M mm	25	25	27	27	34	34

Technical characteristics

References	743					
	2	5	10	15	20	20H
Capacity t	**2**	**5**	**10**	**15**	**20**	**20**
Height mm (H)	300	400	460	470	500	636
Stroke mm	180	265	290	265	270	400
Weight kg	5,8	13,4	27	30	42	60
Price €	**501**	**690**	**1 044**	**1 198**	**1 351**	**1 473**

COMPLETE DATA SHEET ON huchez.com

797



Stainless steel model.



Painted model.

Strong points

- Light, irreversible.
- Small footprint.

Applications

- Sky domes, door manoeuvres...
- Short stroke manoeuvre in irrigation (small reservoirs), industry, construction, metal structures...

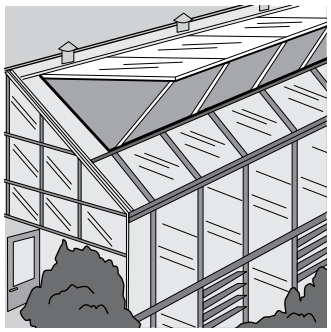

Handling a canopy.



Erection of a scaffolding platform.



Valve opening.

Capacities 500 and 1000 kg.
Rack jacks used for short stroke manoeuvres.

- 735 mm long rack for the stainless steel model, 1 or 2 m long rack for the 500 and 1000 kg painted models, pierced at each ends.
- Automatic load holding by worm screw.
- Fixed crank with ergonomic rotating handle.

Dimensions

Dimensions in mm.

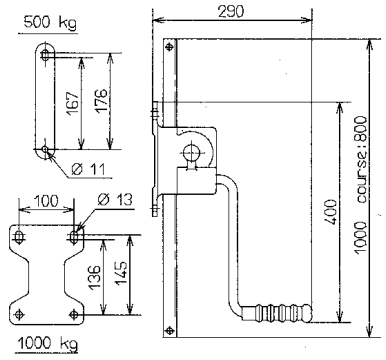

500 – 1000 kg

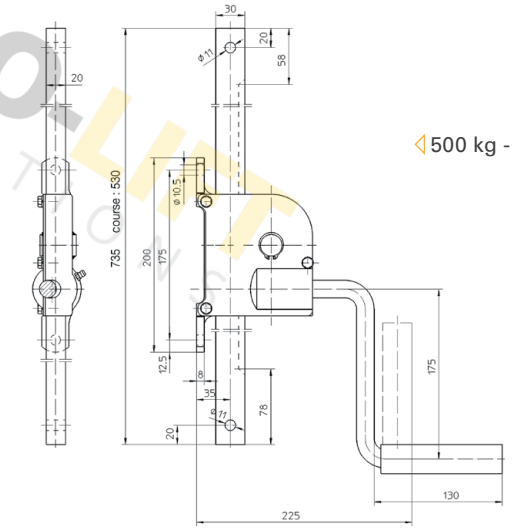

500 kg - stainless steel

Technical characteristics

References	797		
	Painted model		Stainless steel model
Capacity kg	**500**	**1 000**	**500**
Crank effort kg	17	17	16
Lift per crank revolution mm	6	4	9.4
Weight kg	9	12	5.7
Price €			
Stainless steel model with 735 mm long rack	-	-	**1 541**
Painted model with 1 m long rack	**602**	**855**	-
Painted model with 2 m long rack	**754**	**1 051**	-

COMPLETE DATA SHEET ON huchez.com

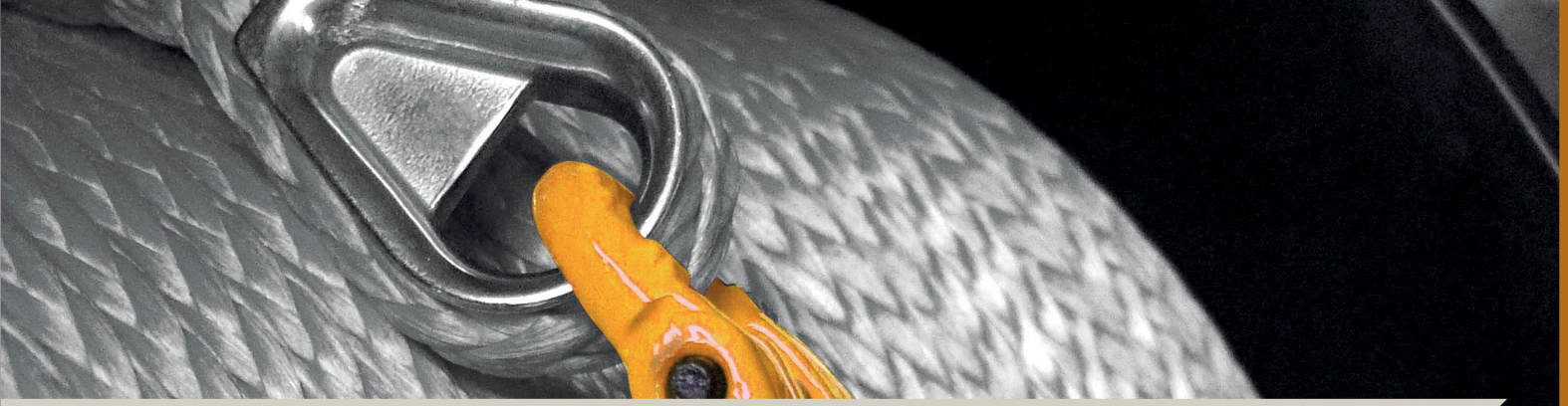

ROPES, HOOKS AND OTHER ACCESSORIES

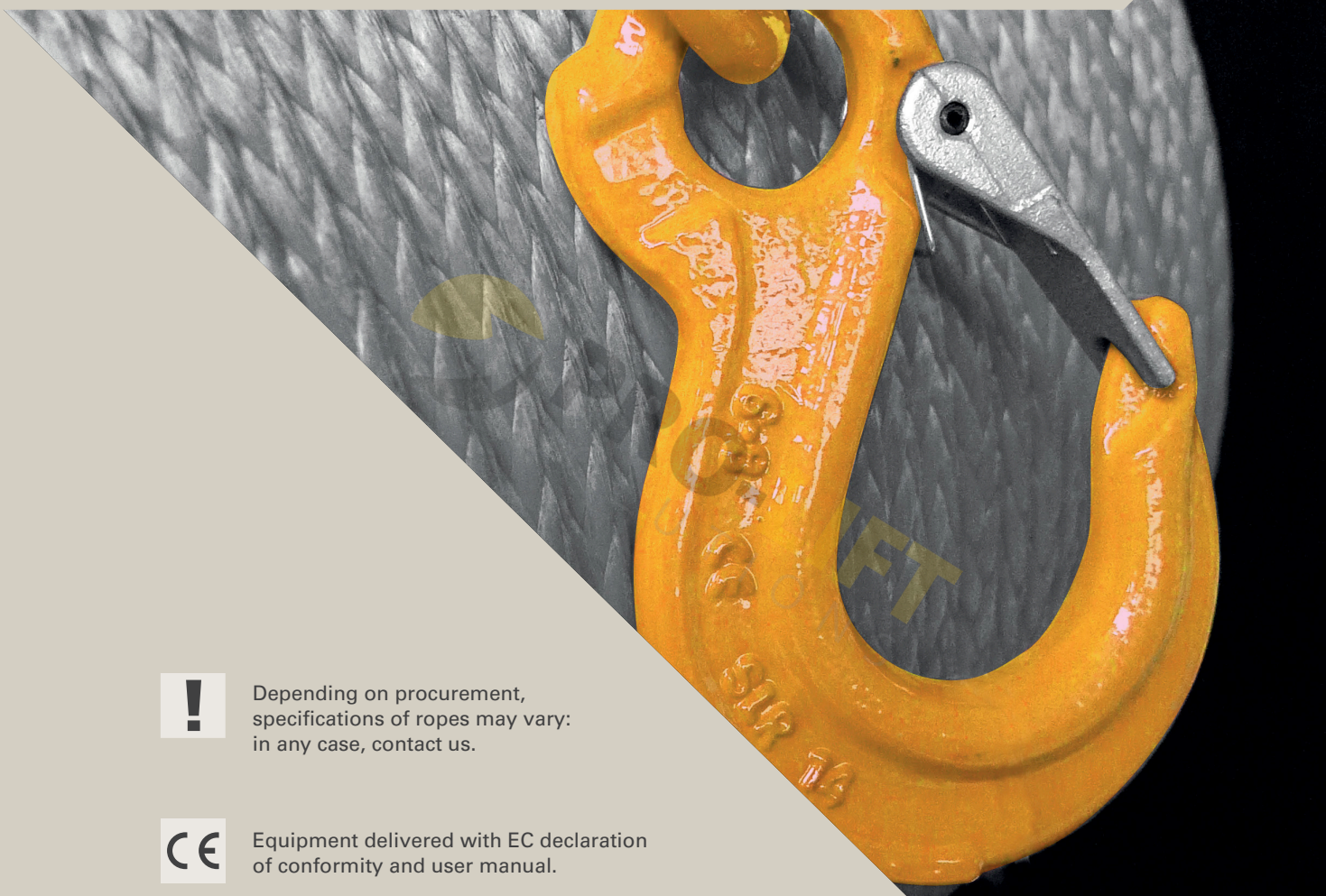

Depending on procurement, specifications of ropes may vary: in any case, contact us.

Equipment delivered with EC declaration of conformity and user manual.

Lifting.

Pulling.

Maxi. wire rope diameter.

Stainless steel range.

Available on order.

Available from stock.

Product available on ARCHIMEDE platform.

DYNEEMA® TEXTILE ROPE

D12 SK75



Single eye hook (ref. 870).



- Ideal for pulling use.
- As resistant as steel for an equivalent diameter and 7 to 8 times lighter.
- Anti-corrosion.
- Non rotating.
- Can be handled without gloves.
- Rope sold by the meter (m/l).

Options
- Splice.
- Single eye hook recommended (ref. 870) : EN1677-2 Standard - The oversized eye allows easy mounting on cables (with thimble) (see. p. 90).
- Other diameters on request.

Technical characteristics

Textile rope Ø mm	4	5	6	7	8	9	10	12	14	16	18	20	22	24	26	28	30
Pulling working load kg	467	733	1 067	1 533	1 933	2 433	3 033	4 333	5 667	7 333	9 333	11 333	14 000	16 000	19 333	22 667	26 000
Mini. Breaking load kg	1 400	2 200	3 200	4 600	5 800	7 300	9 100	13 000	17 000	22 000	28 000	34 000	42 000	48 000	58 000	68 000	78 000
Theoretical weight kg/100 m	0.9	1.5	2	2.7	3.6	4.7	5.7	8	11	14	18	22	26	31	36	42	48
Price €																	
Per m/l	**5.05**	**6.31**	**7.57**	**8.84**	**9.28**	**11.37**	**17.68**	**20.22**	**26.53**	**36.63**	**45.47**	**On request**					
Splice	**52.00**	**52.00**	**52.00**	**52.00**	**52.00**	**52.00**	**52.00**	**52.00**	**52.00**	**52.00**	**52.00**	**52.00**	**52.00**	**52.00**	**52.00**	**52.00**	**52.00**
Single eye hook (ref. 870)	**20.75**	**20.75**	**20.75**	**32.95**	**32.95**	**46.37**	**46.37**	**On request**									

STANDARD WIRE ROPE

GALVANISED



Single eye hook (ref. 870).

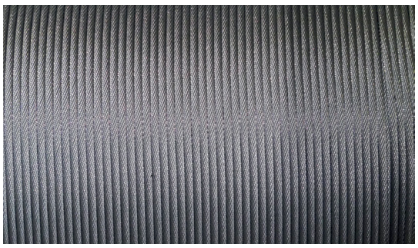

- Metallic central core 1960 N/mm² - Right hand lay.
- Used for lifting or pulling loads, but the load must be guided.
- Wire rope sold by the meter (m/l).

Options
- Sleeved thimble loop.
- Single eye hook recommended (ref. 870) : EN1677-2 Standard - The oversized eye allows easy mounting on cables (with thimble) (see. p. 90).
- Other diameters on request.

Technical characteristics

Wire rope Ø mm	3	4	5	6	7	8	9	10	12	13	16	18	20	22	24	26	28	32
Construction	**6 x 7**	**6 x 7**	**6 x 7**	**6 x 19**	**6 x 19**	**6 x 19**	**6 x 19**	**6 x 19**	**6 x 19**	**6 x 19**	**6 x 19**	**6 x 36**	**6 x 36**	**6 x 36**	**6 x 36**	**6 x 36**	**6 x 36**	**6 x 36**
Lifting working load kg	129	230	359	512	698	912	1 153	1 424	2 040	2 407	3 652	4 610	5 692	6 895	8 201	9 629	11 159	14 586
Pulling working load kg	215	384	598	853	1 163	1 520	1 921	2 373	3 400	4 012	6 086	7 684	9 486	11 492	13 668	16 048	18 598	24 310
Mini. breaking load kg	645	1 152	1 795	2 560	3 488	4 559	5 763	7 119	10 200	12 036	18 258	23 052	28 458	34 476	41 004	48 144	55 794	72 930
Theoretical weight kg/m	0.034	0.061	0.096	0.144	0.188	0.246	0.31	0.384	0.553	0.649	0.983	1.24	1.54	1.86	2.21	2.6	3.01	3.93
Price €																		
Per m/l	**5.05**	**6.31**	**6.31**	**6.31**	**6.31**	**8.84**	**6.31**	**7.57**	**7.57**	**8.84**	**10.1**	**10.1**	**11.37**	**12.63**	**15.15**	**16.41**	**17.68**	**21.47**
Sleeved thimble loop	**26.00**	**26.00**	**26.00**	**26.00**	**26.00**	**26.00**	**26.00**	**26.00**	**26.00**	**62.00**	**62.00**	**62.00**	**62.00**	**62.00**	**62.00**	**62.00**	**62.00**	**62.00**
Single eye hook (ref. 870)	**20.75**	**20.75**	**20.75**	**20.75**	**20.75**	**20.75**	**32.95**	**32.95**	**32.95**	**46.37**	**108.59**	**108.59**	**167.16**	**167.16**	**444.14**	**444.14**	**444.14**	**On request**

COMPLETE DATA SHEET ON huchez.com

HIGH RESISTANCE

- Metallic central core 2160 N/mm² - 8 outer strands.
- Used for lifting or pulling loads.
- Great flexibility.
- Very high breakage load.
- Do not use to lift on a single fall for a non guided load.
- Wire rope sold by the meter (m/l).

Options
- Sleeved thimble loop.
- Single eye hook recommended (ref. 870) : EN1677-2 Standard - The oversized eye allows easy mounting on cables (with thimble) (see. p. 90).
- Other diameters on request.

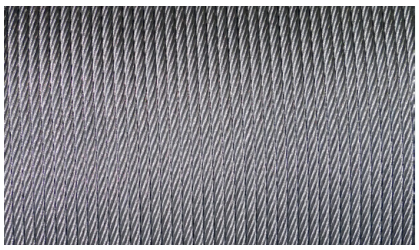

Single eye hook (ref. 870).



Technical characteristics

Wire rope Ø mm	4	5	6,4	7	8	9	10	11	12	13	15
Construction	**8 x 12**	**8 x 12**	**8 x 12**	**8 x 12**	**8 x 12**	**8 x 12**	**8 x 17**	**8 x 17**	**8 x 17**	**8 x 17**	**8 x 17**
Lifting working load kg	264	430	844	1 053	1 308	1 679	2 081	2 509	2 999	3 590	4 835
Pulling working load kg	440	717	1 407	1 754	2 179	2 798	3 468	4 182	4 998	5 984	8 058
Mini. breaking load kg	1 320	2 150	4 222	5 263	6 538	8 394	10 404	12 546	14 994	17 952	24 174
Theoretical weight kg/m	0,068	0,106	0,157	0,19	0,3	0,38	0,47	0,57	0,68	0,81	1,09
Price €											
Per m/l	**24.00**	**18.95**	**11.37**	**12.63**	**12.63**	**15.15**	**17.68**	**18.95**	**21.48**	**24.00**	**29.06**
Sleeved thimble loop	**26.00**	**26.00**	**26.00**	**26.00**	**26.00**	**63.00**	**63.00**	**63.00**	**63.00**	**63.00**	**63.00**
Single eye hook (ref. 870)	**20.75**	**20.75**	**20.75**	**20.75**	**32.95**	**32.95**	**46.37**	**46.37**	**46.37**	**108.59**	**108.59**

Wire rope Ø mm	16	18	20	22	24	26	28	30	32	34
Construction	**8 x 17**	**8 x 26**	**8 x 26**	**8 x 26**	**8 x 26**	**8 x 26**	**8 x 26**	**8 x 31**	**8 x 31**	**8 x 31**
Lifting working load kg	5 406	6 834	8 384	10 200	12 362	14 300	16 524	19 237	21 746	24 888
Pulling working load kg	9 010	11 390	13 974	17 000	20 604	23 834	27 540	32 062	36 244	41 480
Mini. breaking load kg	27 030	34 170	41 922	51 000	61 812	71 502	82 620	96 186	108 732	124 440
Theoretical weight kg/m	1.22	1.54	1.9	2.3	2.79	3.23	3.73	4.34	4.91	5.61
Price €										
Per m/l	**31.57**	**39.15**	**44.22**	**51.79**	**59.38**	**68.22**	**77.04**	**89.71**	**102.32**	**114.95**
Sleeved thimble loop	**63.00**	**63.00**	**63.00**	**107.00**	**107.00**	**107.00**	**107.00**	**107.00**	**107.00**	**107.00**
Single eye hook (ref. 870)	**108.59**	**167.16**	**167.16**	**167.16**	**167.16**			**On request**		

NON ROTATING WIRE ROPE
GALVANISED

NEW



Single swivel hook (ref. 871)



- Metallic central core 2170 N/mm² - Right hand or left hand lay according to model.
- Used for lifting non guided loads.
- High breakage load.
- Great flexibility.
- Wire rope sold by the meter (m/l) or according to diameter, in kit (wire rope with sleeved thimble loop and single swivel hook).

Options
- Sleeved thimble loop.
- Single swivel hook recommended : EN1677-2 standard -The large bracket allows easy mounting on wire ropes (with thimble) - Hooks fitted with needle or roller bearings allowing very good rotation when on load (see p. 90).
- Other diameters on request.

Technical characteristics

	RIGHT HAND LAY WIRE ROPE					
Wire rope Ø mm	**3**	**4**	**5**	**6**	**7**	**8**
Construction	**18 x 7**	**18 x 7**	**18 x 7**	**18 x 7**	**18 x 7**	**18 x 7**
Lifting working load kg	160	220	460	610	750	1 120
Pulling working load kg	267	367	767	1 017	1 250	1 867
Mini. breaking load kg	800	1 100	2 300	3 050	3 750	5 600
Theoretical weight kg/m	0.037	0.083	0.111	0.15	0.185	0.29
Price €						
Per m/l	**7.57**	**7.57**	**7.57**	**7.57**	**8.84**	**12.63**
Sleeved thimble loop	**26,00**	**26.00**	**26.00**	**26.00**	**26.00**	**26.00**
Single swivel hook (ref. 871)	**63.45**	**63.45**	**63.45**	**63.45**	**63.45**	**63.45**
Wire rope kit with sleeved thimble loop and single swivel hook, 5 m NEW	**108.48**	-	-	-	-	-
Wire rope kit with sleeved thimble loop and single swivel hook, 10 m NEW	-	**140.11**	**140.13**	**107.9**	-	-
Wire rope kit with sleeved thimble loop and single swivel hook, 15 m NEW	-	**172.33**	**172.33**	**140.13**	**188.5**	**236.72**
Wire rope kit with sleeved thimble loop and single swivel hook, 20 m NEW	-	-	**204.52**	-	-	-
Wire rope kit with sleeved thimble loop and single swivel hook, 35 m NEW	-	-	**301.07**	-	-	**451.4**
Wire rope kit with sleeved thimble loop and single swivel hook, 40 m NEW	-	-	-	-	**376.48**	-
Wire rope kit with sleeved thimble loop and single swivel hook, 45 m NEW	-	-	-	-	-	-
Wire rope kit with sleeved thimble loop and single swivel hook, 50 m NEW	-	-	**397.75**	-	-	**612.43**

	RIGHT HAND LAY WIRE ROPE		LEFT HAND LAY WIRE ROPE		
Wire rope Ø mm	**9**	**11.5**	**5**	**7**	**9**
Construction	**18 x 7**	**18 x 7**	**18 x 7**	**18 x 7**	**18 x 7**
Lifting working load kg	1 320	2 200	460	750	1 320
Pulling working load kg	2 200	3 667	767	1 250	2 200
Mini. breaking load kg	6 600	11 000	2 300	3 750	6 600
Theoretical weight kg/m	0.328	0.588	0.111	0.185	0.328
Price €					
Per m/l	**12.63**	**15.15**	**7.57**	**8.84**	**13.24**
Sleeved thimble loop	**18.00**	**63.00**	**26.00**	**26.00**	**26.00**
Single swivel hook (ref. 871)	**111.03**	**124.45**	**63.45**	**63.45**	**111.03**
Wire rope kit with sleeved thimble loop and single swivel hook, 5 m NEW	-	-	-	-	-
Wire rope kit with sleeved thimble loop and single swivel hook, 10 m NEW	-	-	-	-	-
Wire rope kit with sleeved thimble loop and single swivel hook, 15 m NEW	**269.52**	-	-	-	-
Wire rope kit with sleeved thimble loop and single swivel hook, 20 m NEW	-	-	-	-	-
Wire rope kit with sleeved thimble loop and single swivel hook, 35 m NEW	-	-	-	-	-
Wire rope kit with sleeved thimble loop and single swivel hook, 40 m NEW	**591.58**	-	-	-	-
Wire rope kit with sleeved thimble loop and single swivel hook, 45 m NEW	-	**727.95**	-	-	-
Wire rope kit with sleeved thimble loop and single swivel hook, 50 m NEW	-	-	-	-	-

PROLIFT SOLUTIONS

COMPLETE DATA SHEET ON huchez.com
PROLIFT SOLUTIONS

GALVANISED

- Metallic central core 1960 N/mm² - Right hand lay.
- Used for lifting non guided loads.
- High breakage load.
- Great flexibility.
- Wire rope sold by the meter (m/l).

Options
- Sleeved thimble loop.
- Single swivel hook recommended : EN1677-2 standard - The large bracket allows easy mounting on wire ropes (with thimble) - Hooks fitted with needle or roller bearings allowing very good rotation when on load (see p. 90).
- Other diameters on request.

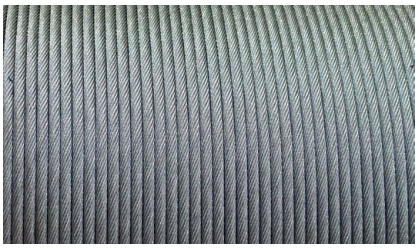

Single swivel hook
(ref. 871)



Technical characteristics

Wire rope Ø mm	3	4	5	7	8	9	10	12	13
Construction	**18 x 7**	**18 x 7**	**19 x 7**	**18 x 7**	**24 x 7**	**24 x 7**	**24 x 7**	**24 x 7**	**24 x 7**
Lifting working load kg	120	210	363	643	1 102	1 392	1 764	2 160	2 980
Pulling working load kg	200	350	605	1 071	1 837	2 320	2 940	3 600	4 967
Mini. breaking load kg	600	1 049	1 815	3 213	5 510	6 960	8 820	10 800	14 900
Theoretical weight kg/m	0.036	0.064	0.94	0.197	0.28	0.356	0.464	0.56	0.779
Price €									
Per m/l	**7.57**	**7.57**	**7.57**	**8.84**	**12.63**	**12.63**	**15.15**	**15.15**	**18.95**
Sleeved thimble loop	**26.00**	**26.00**	**26.00**	**26.00**	**26.00**	**18.00**	**63.00**	**63.00**	**63.00**
Single swivel hook (ref. 871)	**63.45**	**63.45**	**63.45**	**63.45**	**63.45**	**111.03**	**111.03**	**124.45**	**124.45**

Wire rope Ø mm	14	16	18	20	22	24	26	30
Construction	**24 x 7**	**18 x 7**	**24 x 7**	**24 x 7**	**24 x 17**	**24 x 17**	**18 x 7**	**24 x 17**
Lifting working load kg	3 480	3 357	5 880	7 080	8 660	10 520	9 720	16 160
Pulling working load kg	5 800	5 595	9 800	11 800	14 433	17 533	16 200	26 933
Mini. breaking load kg	17 400	16 785	29 400	35 400	43 300	52 600	48 600	80 800
Theoretical weight kg/m	0.907	1.03	1.508	1.883	2.284	2.751	2.71	4.243
Price €								
Per m/l	**21.48**	**16.41**	**29.06**	**34.1**	**39.15**	**46.74**	**39.15**	**80.21**
Sleeved thimble loop	**63.00**	**63.00**	**63.00**	**63.00**	**107.00**	**107.00**	**107.00**	**107.00**
Single swivel hook (ref. 871)	**187.9**	**187.9**	**389.22**	**389.22**	**433.16**	**433.16**	**433.16**	**On request**

STAINLESS STEEL

NEW



Stainless steel single eye hook (ref. 872).

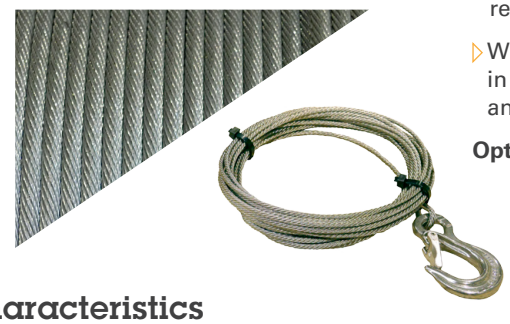

- Metallic central core - Right hand lay.
- Use by the sea or outdoors with specific customary requirements.
- Wire rope sold by the meter (m/l) or according to diameter, in kit (stainless steel wire rope with sleeved thimble loop and stainless steel single eye hook).

Options
- Sleeved thimble loop.
- Stainless steel single eye hook recommended: EN1677-2-316L Standard - The oversized eye allows easy mounting on cables (with thimble) (see. p. 90).
- Other diameters on request.

Technical characteristics

Stainless steel wire rope Ø mm	2.5	3	4	5	6	7	8
Construction	**7 x 19**	**7 x 19**	**7 x 19**	**7 x 19**	**7 x 19**	**7 x 19**	**7 x 19**
Lifting working load kg	68	92	166	260	376	512	666
Pulling working load kg	113	153	277	433	627	853	1 110
Mini. breaking load kg	340	460	830	1 300	1 880	2 560	3 330
Theoretical weight kg/m	0.024	0.034	0.061	0.095	0.138	0.187	0.243
Price €							
Per m/l	**6.28**	**6.31**	**6.31**	**7.57**	**8.84**	**10.1**	**11.37**
Sleeved thimble loop	**28.00**	**28.00**	**28.00**	**28.00**	**28.00**	**28.00**	**28.00**
Stainless steel single eye hook (ref. 872)	**135.44**	**135.44**	**135.44**	**135.44**	**135.44**	**135.44**	**135.44**
Stainless steel wire rope kit with sleeved thimble loop and stainless steel single eye hook, 10 m NEW	-	-	**191.65**	**202.36**	**213.14**	-	-
Stainless steel wire rope kit with sleeved thimble loop and stainless steel single eye hook, 15 m NEW	-	-	**218.53**	**234.54**	-	**266.76**	**282.93**

Stainless steel wire rope Ø mm	9	10	12	14	16	18
Construction	**7 x 19**	**7 x 19**	**7 x 19**	**7 x 19**	**7 x 19**	**7 x 19**
Lifting working load kg	844	1 042	1 500	2 040	2 660	3 683
Pulling working load kg	1 407	1 737	2 500	3 400	4 433	6 138
Mini. breaking load kg	4 220	5 210	7 500	10 200	13 300	18 414
Theoretical weight kg/m	0.308	0.381	0.548	0.746	0.974	1.23
Price €						
Per m/l	**12.63**	**13.89**	**17.68**	**21.48**	**26.53**	**31.57**
Sleeved thimble loop	**28.00**	**28.00**	**59.00**	**59.00**	**59.00**	**69.00**
Stainless steel single eye hook (ref. 872)	**184.24**	**184.24**	**242.81**	**577.13**	**577.13**	**On request**
Stainless steel wire rope kit with sleeved thimble loop and stainless steel single eye hook, 10 m NEW	-	-	-	-	-	-
Stainless steel wire rope kit with sleeved thimble loop and stainless steel single eye hook, 15 m NEW	-	-	-	-	-	-

HOOKS

Dimensions

On request.

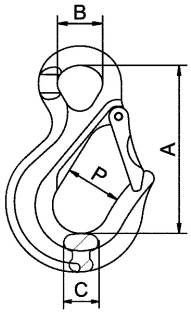

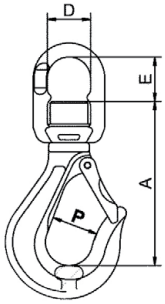



Single eye hook (ref. 870)



Single swivel hook (ref. 871)



Stainless steel single eye hook (ref. 872)

COMPLETE DATA SHEET ON huchez.com

STORAGE RACK FOR ACCESSORIES
940

NEW

- All your lifting accessories (slings, ropes...) neatly stored.
- Legs and suspension beams in steel. Grey paint finish (RAL 7016).
- Adjustable in height suspension beams.
- Delivered in 4 pieces with 2x6 galvanized double suspension hook.
- **Be careful: this storage rack should not be used for lifting loads.**

Options
- Additional suspension beam.
- Additional hooks (the pair)
- Other colours.



Dimensions

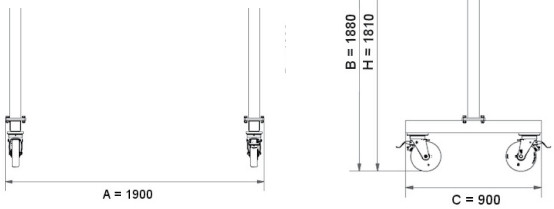

Technical characteristics

Reference	940
Capacity (by hook/beam/storage rack) kg	**85 / 500 / 1000**
A / B / H / C mm	1900 / 1880 / 1810 / 900
Weight kg	120
Price €	**1 241**

STEEL SHEAVE
503

MAX 16 T

Steel sheave on bearing for wire rope Ø 6 to 24 mm.

- Forged steel, except for diameter 150 mm which is machined steel.
- Yellow zinc-plated finish.
- Bore on sealed bearings.



Technical characteristics

Reference	503						
Outer Ø (D) mm	150	200	297	375	425	510	570
Tread sheave (DG) mm	133	172	257	320	355	440	500
Capacity kg, wire rope at 90°	1 000	1 600	4 000	6 300	8 000	12 500	16 000
Wire rope Ø mm	6/7	8/9	12/13	15/16	17/18	20/22	22/24
Axis Ø mm	25	35	60	80	90	110	120
Bearing mm	6205 2RS	6207 2RS	6212 2RS	6216 2RS	6218 2RS	6222 2RS	6224 2RS
Weight kg	2.1	4.4	12.5	24.5	35	59	115
Price €	**77**	**102**	**275**	**759**	**934**	**1 423**	**3 054**

Dimensions

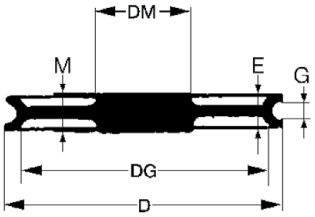

CLEVIS PULLEY
504 / 520

MAX 11,5 T

Capacity from 630 kg to 11.5 t.

- Steel fixed (ref. 504) or opening clevis pulley (ref. 520) for wire rope Ø5 to 21 mm redirection, reeving to increase the capacity of a winch.
- Bichromate finish, forged hook.

Technical characteristics

Reference	520	504 / 520				
SWL kg	**630**	**1000**	**2000**	**4000**	**8000**	**11500**
Wire rope Ø mm	8/9	5/6	8/9	12/13	15/17	18/21
Sheave Ø - Ø 1 mm	100-80	150-125	235-200	325-280	411-355	525-450
L/H mm	106/293	160/350	240/490	330/650	425/830	530/1000
E mm	59	70	90	135	130	165
Weight kg	2.5	4.8	10.5	25.5	53	83
Price €						
504	**-**	**471**	**684**	**1 034**	**1 806**	**3 374**
520	**257**	**488**	**724**	**1 119**	**1 924**	**3 544**

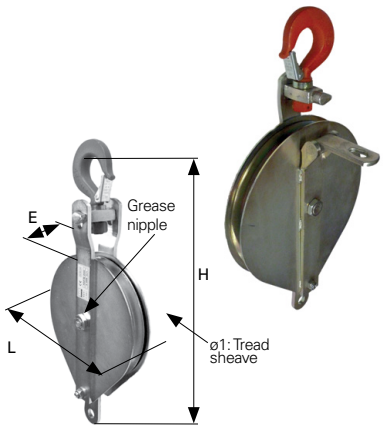

COMPLETE DATA SHEET ON huchez.com

FIXED PULLEYS WITH SUPPORT PLATES

PF

Fixed pulleys with support plates for wire rope Ø 4 to 24 mm.

Blocking system to avoid the wire rope to go out of the system.



Technical characteristics

References	PF								
	4	5	6/7	8/9	12/13	15/16	17/18	20	22/24
A mm	80	100	150	200	295	375	425	510	570
B mm	87	108	161	215	312,5	394,5	452,5	543	610
C mm	72	90	135	160	200	240	270	330	370
ØE mm	70	85	133	172	250	320	355	440	500
ØV mm	6,5	8,5	11,5	14	18	20	26	32	32
F mm	51	63	95	115	140	170	190	230	260
G mm	59	73	110	155	235	300	340	410	460
Wire rope Ø mm	4	5	6/7	8/9	12/13	15/16	17/18	20	22/24
Maxi cable force at 90°, kg	500	850	1 400	2 300	5 700	7 800	10 300	13 000	16 000
Maxi cable force at 180°, kg	350	600	1 000	1 600	4 000	5 500	7 300	9 200	11 500
Sheave outer Ø mm	80	100	150	200	297	375	425	510	570
Weight kg	1	1,5	5	11	29	54,6	88,4	151,7	265
Price €	**95**	**114**	**147**	**206**	**430**	**854**	**1 134**	**2 356**	**On request**

Dimensions

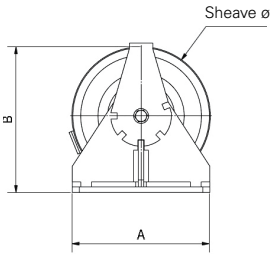

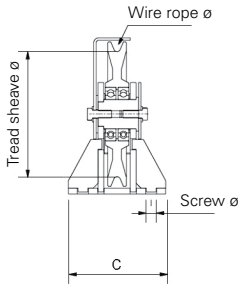

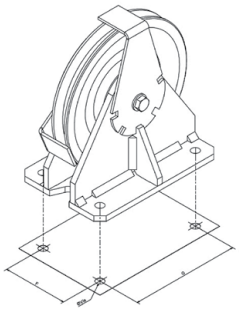

ARTICULATED PULLEYS WITH SUPPORT PLATES

PA

Articulated pulleys with support plates for wire rope Ø 6 to 16 mm.

Blocking system to avoid the wire rope to go out of the system.

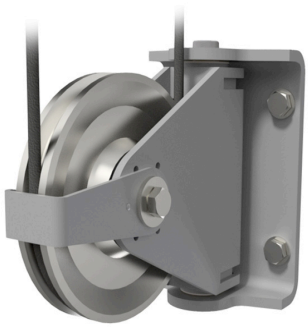

Technical characteristics

References	PA			
	6/7	8/9	12/13	15/16
A mm	198	247	348	434
B mm	224	281.5	397.5	492.5
C mm	125	150	200	240
ØE mm	133	172	250	320
ØV mm	12	14	18	23
F mm	95	115	140	170
G mm	110	155	235	300
Wire rope Ø mm	6/7	8/9	12/13	15/16
Maxi cable force at 90°, kg	1 400	2 300	5 700	7 800
Maxi cable force at 180°, kg	1 000	1 600	4 000	5 500
Sheave outer Ø mm	150	200	297	375
Weight kg	6.8	13.2	34.1	62.7
Price €	**169**	**242**	**513**	**967**

Dimensions

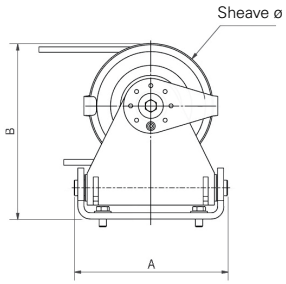

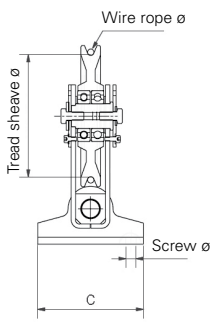

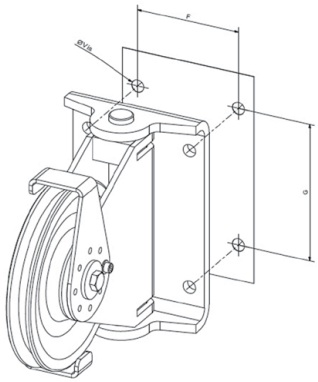

COMPLETE DATA SHEET ON huchez.com

PE



Pulleys with electromechanical overload detection from 100 to 1500 kg.

- Indoor-Outdoor use.
- Rigid steel frame.
- Steel sheaves on bearings.
- The pulley acts as a simple switch by detecting too high tensions in the wire rope thanks to an electrical contact (IP67).
- Initial calibration of the spring and of trigging effort set in factory.

Strong points

- Easy to install.
- Electromechanical operation.

Uses

- Industry...

Wire rope outlets

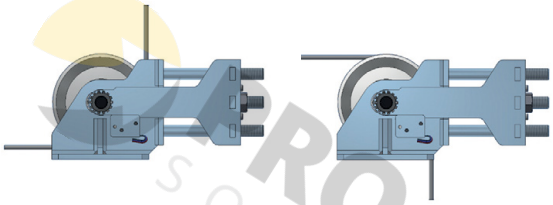

△ Possible mounting from 85° to 95°

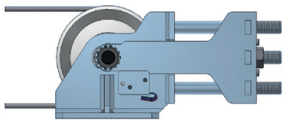

△ Possible mounting from 160° to 200°

These angles must be respected in order to have an accuracy greater than 95%.

Dimensions

References	PE 100/300/500	PE 750/1000/1500
A mm	110	235
B mm	95	140
ØC mm	11.5	18
ØD mm	150	297
E mm	76.5	147.5
Ø F (Tread sheave) mm	133	257
L mm	328	500
l mm	135	200
h mm	163	312.5

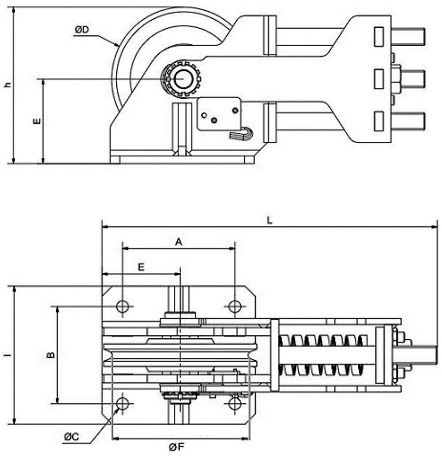

Technical characteristics

References	PE 100	PE 300	PE 500	PE 750	PE 1000	PE 1500
Wire rope Ø mm	3	5	7	8	9	10
Wire rope capacity kg (angle between 2 falls at 180°)	50	150	250	375	500	750
Wire rope capacity kg (angle between 2 falls at 90°)	100	300	500	750	1 000	1 500
Price €	**810**	**810**	**810**	**1 946**	**1 946**	**1 946**

COUNTERWEIGHT

CP

Range of counterweights from 3.6 kg to 50 kg.

- Grey monobloc cast iron counterweight.
- Black paint finish.
- Ensure tension on the lifting winches wire ropes.





Dimensions

References	CP 3,6	CP 10	CP 20	CP 25	CP 50
h mm	115	170	340	236	472
Ø D mm	85	130	130	169	169

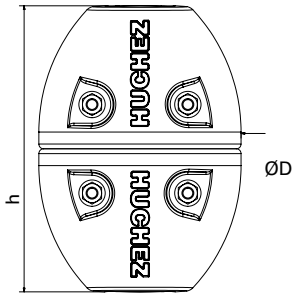

Technical characteristics

References	CP 3,6	CP 10	CP 20	CP 25	CP 50
Weight kg	**3.6**	**10**	**20**	**25**	**50**
Wire rope Ø mm	3	4/5/6	7/8	9/10	11.5/13
Price €	**108**	**178**	**360**	**361**	**719**

CAST IRON WIRE ROPE SHEAVES

502

Cast iron sheaves for wire rope from Ø 5 to 14 mm.

Dimensions

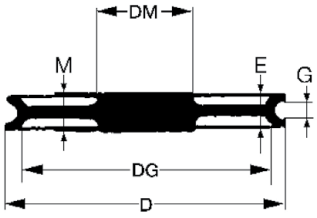

Technical characteristics

References	502			
Outer Ø (D) mm	85	110	150	240
Tread sheave Ø (DG) mm	66	88	122	200
Capacity kg	250	500	1 000	2 500
Wire rope maxi. Ø mm	5	7	8	14
Rim width (E) mm	15.5	19.5	24	36
Hub width (M) mm	20	24	30	40
Hub Ø (M) mm	28	33	40	58
Weight kg	0.4	0.7	1.5	4.85
Price €	**15**	**22**	**33**	**87**



STEERING WHEEL FOR 6 X 18 CHAIN

540

Steering wheel Ø 200 or 300 mm for chain 6 x 18.

Dimensions

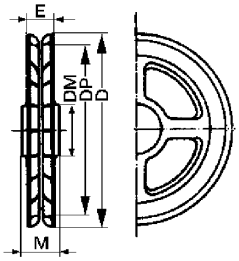

Technical characteristics

References	540	
D mm	200	300
Nb pans	15	23
DP mm	172	263
DM mm	50,5	60
E mm	37	40
M mm	41	42
Weight kg	3	7
Price €	**78**	**158**



COMPLETE DATA SHEET ON huchez.com

GENERAL



ROPES

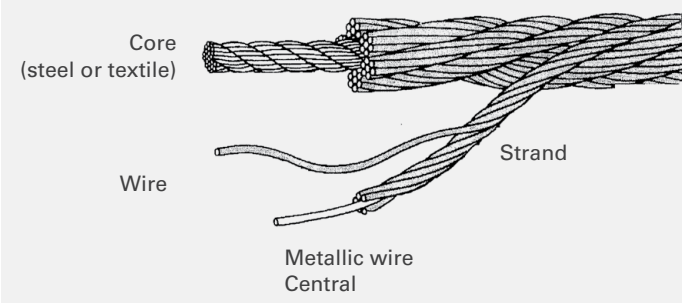

Rope diameter measurement

Correct measurement by means of a caliper:

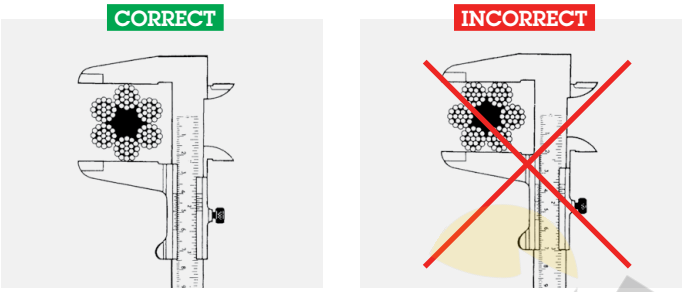

Rope handling

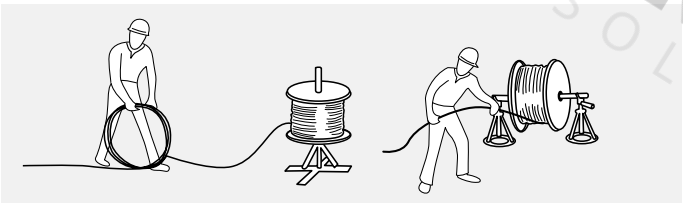

CORRECT

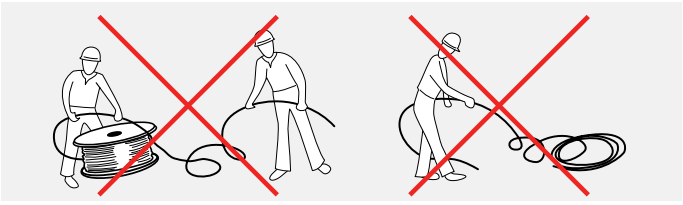

INCORRECT

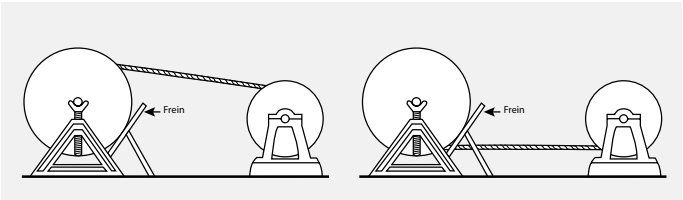

CORRECT

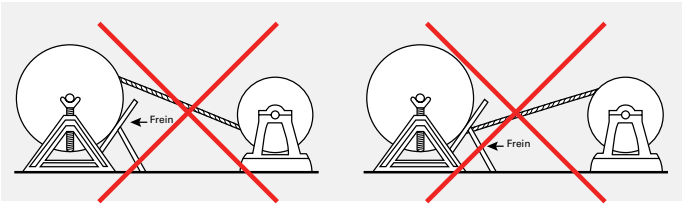

INCORRECT

Choosing a wire rope

The choice of a cable can be complex because of the many parameters to examine:

- Lifting or pulling,
- Guided or free load,
- Frequency of use of the winch,
- Distance – winding length – lifting,
- Environment : indoor, outdoor, harsh,...
- Use or non-use of idler pulley and their quantity.
- Direction of wire-rope winding, grooving of the drum, etc...
- Safety coefficient wire-rope according to the application.

Our sales representatives are available for advice.

What are the main characteristics to define?

TYPE OF WIRE ROPE		
	Load in free rotation	**Guided load**
Lifting	Non rotating steel cable + swivel (hook)	▷ Standard steel rope ▷ High strength steel rope ▷ Stainless steel rope
Pulling	Non applicable	▷ DYNEEMA Textile rope ▷ High strength steel rope ▷ Standard steel rope ▷ Stainless steel rope

ROPE DIAMETER

The diameter of the wire rope is defined according to its minimum breaking load:

Minimum breaking load =
Winch capacity X safety coefficient.

The safety coefficient is determined as follows:

	Non rotating rope	**Standard steel rope**
Lifting	The Machines Directive 2006/42 / EC imposes a (minimum) coefficient of **5**	The Machines Directive 2006/42 / EC RECOMMENDS a coefficient of **5**
Pulling	Non applicable	Without particular recommendation by the Machines Directive 2006/42 / EC Generally a coefficient of **3**

HUCHEZ winches are engineered to be equipped with ropes corresponding to these safety coefficients.

PRO-LIFT SOLUTIONS

Type of rope construction: right or left

- Right winding / grooving requires a left hand lay cable.
- Left winding / grooving requires a right hand lay cable.
- A double winding drum, right and left, therefore requires 2 different cables.

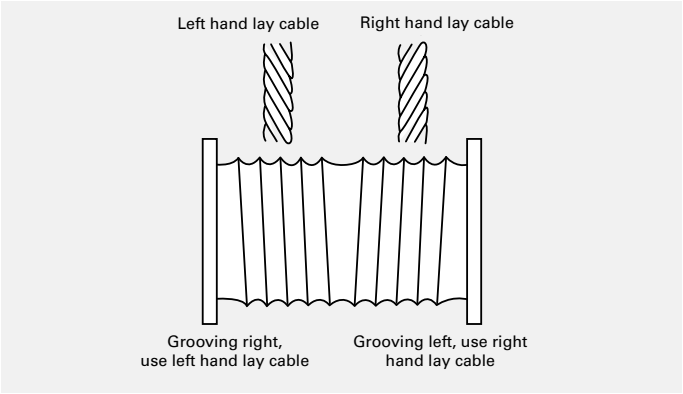

D/d Ratio – drum/rope

The D/d ratio (drum diameter / rope diameter) is a key factor in ensuring cable longevity. It depends on the mechanism classification (FEM / ISO) of the device:

FEM/ISO	D/d ratio
M1 - 1Dm	11.2
M2 - 1Cm	12.5
M3 - 1Bm	14
M4 - 1Am	16
M5 - 2m	18
M6 - 3m	20
M7 - 4m	22.4
M8 - 5m	25

The drums of HUCHEZ winches are engineered in compliance with this rule.

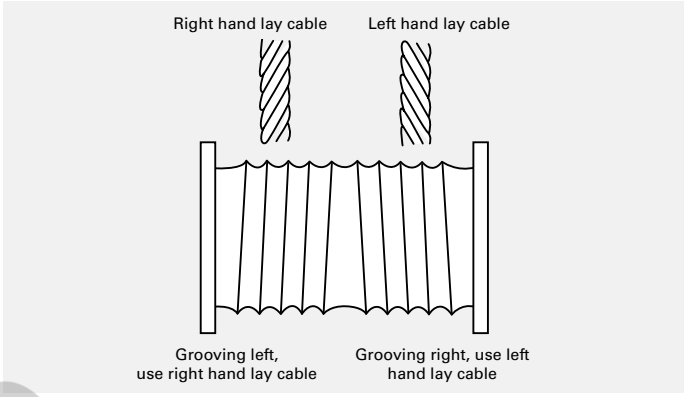

Winding the rope on the drum

- The wire-rope must be securely attached to the drum.
- The first turn on the drum should be as close and parallel as possible with the flask drum.
- The first layer must be wound in a compact manner and under tension.
- In all cases, the layers must be all wound on the drum with sufficient pre-tension (5-10% of the SWL of the cable). If this is not the case, the cable will be subject to premature crushing and flattening caused by the top layers under load.
- A loss of pretension can be observed when it is started up. In this case, the winding procedure must be restarted at regular intervals.
- It is necessary to use the direction of the wiring (right or left) adapted to the drums.
- This applies both to smooth and grooved drums.
- Certain models have a grooved drum going two ways: one part of the grooves to the right, the other to the left. Some ropes are more sensitive to this set-up than others.
- In certain cases, it is best to use the roping direction depending on the drum layers most used (in the event of multi-layer use).
  - If the first rope layer on the drum is only used as a «guide» it will be best to use the rope direction of the second layer on the drum.

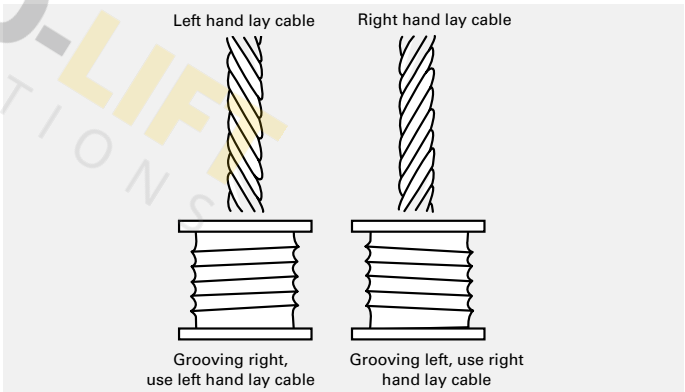

The easiest way to determine the right combination wiring / grooving is to observe the drum axis and the axis of rope: they must be in reverse.

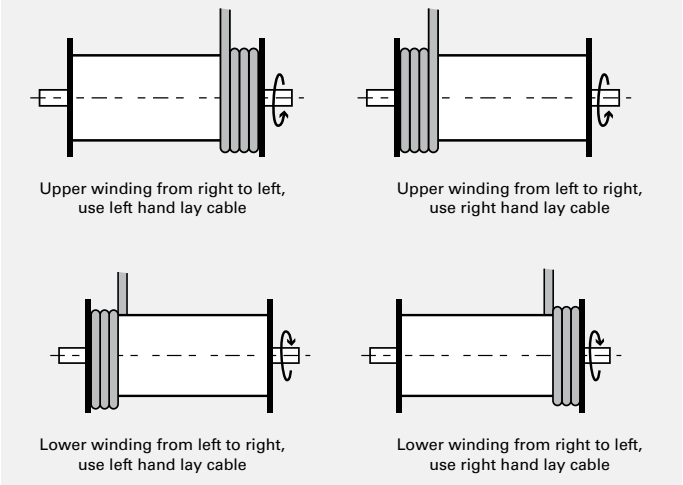

ROPES

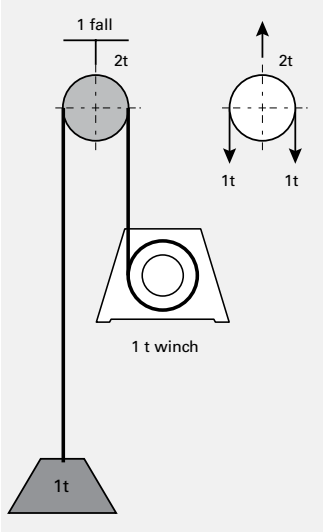

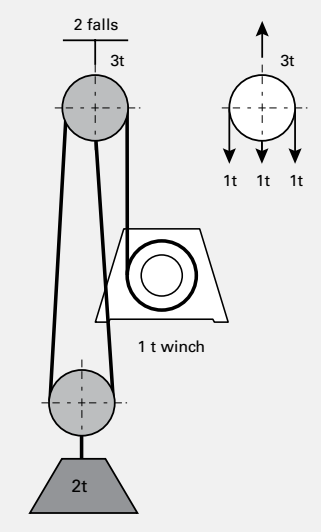

Use with pulley or pulley block

Principle of reeving.

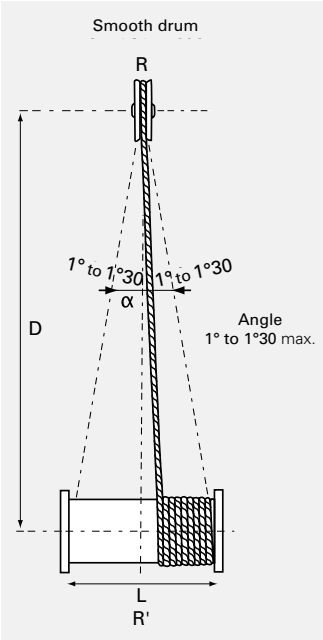

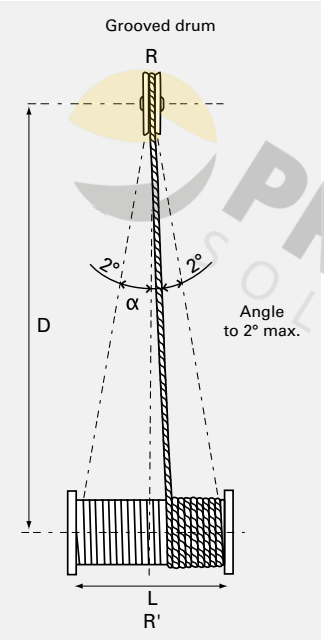

Deflection angle

α = 1.5° max on smooth drum.

α = 2° max on grooved drum.

In practice, the minimum distance D must be: D min = 20 x L

PRO-LIFT SOLUTIONS

An excessive deflection angle causes:

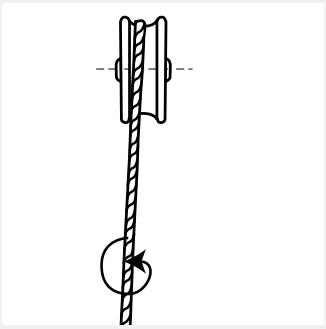

△ Dangerous rope winding.

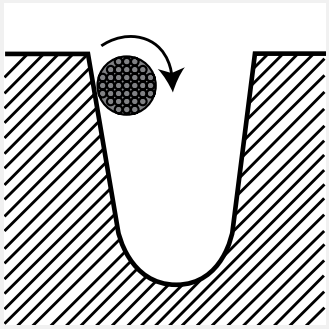

△ Fast wear of the groove and the rope.

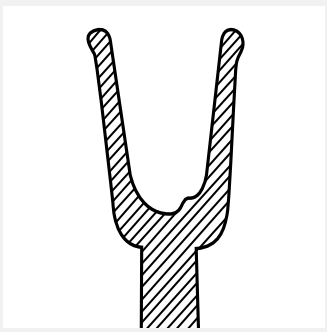

△ Excessively tight winding on the drum or overlapping.

Tests made by Stuttgart University indicate the following shortening of the rope life according to the slant angle:

Deflection angle	Longevity factor
0°	1
1°	0.9
2°	0.75
3°	0.70
4°	0.67

PRO-LIFT SOLUTIONS

Rope re-greasing

When it is manufactured, the rope receives considerable greasing that must be regularly renewed. The ropes may therefore be re-greased in view of their use, particularly along the areas subject to bending.

If, for operational reasons, re-greasing cannot be carried out, the rope life will be shortened and inspections must be made more frequently.

The influence of greasing and re-greasing on the life span is illustrated here:

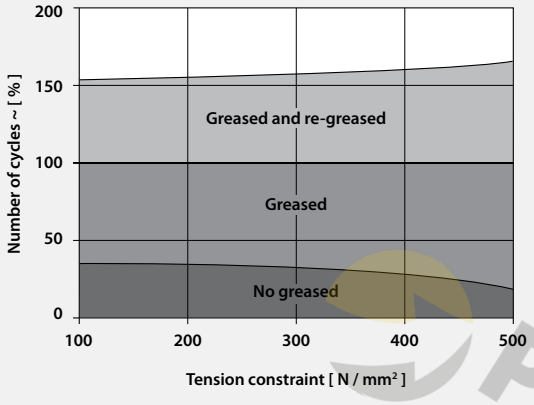

Rope ends

A winch's safety and correct operation largely depends on the rope end on the winch and the load. It is best to have an expert check the rope ends and the ropes themselves. The rope end illustrated bellow is one of the authorised ends for lifting. However, bear in mind that crimping also causes 10% loss of breaking load.

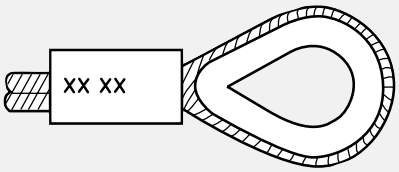

« Talurit » crimping with tag

End prohibited when lifting.

- The rope holders may in no case be used as rope endings in «lifting».

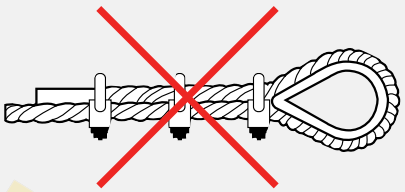

Inspections

- Daily visual inspection.
- Periodical inspections by qualified persons depending on the conditions and time of use of the apparatus, its type and its classification.
- Special inspections if the lifting apparatus is out of service for 3 months or more, or after damage to the rope or attachment points.

Examples of a few possible defects associated with the ropes (non-exhaustive list):



- "Corkscrew" deformation



- "Basket" deformation



- Strand extrusion



- External wear

Source : Lifting accessories, INRS

Calculation of traction forces

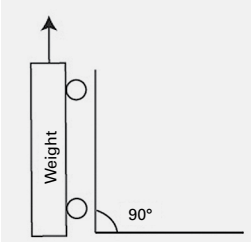

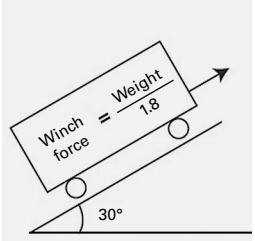

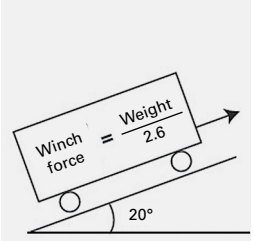

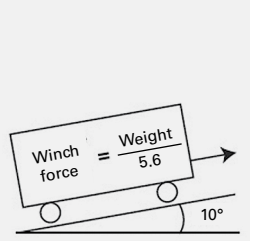

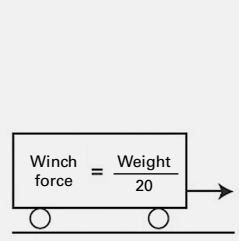

PRO-LIFT SOLUTIONS

HUCHEZ,

THE STRENGTH OF A GROUP

CHASTAGNER LOCATION
Construction site lifting

contact@chastagner.fr

chastagner.fr

- **1 annual hire catalogue**
- +
- Advice
- Delivery
- Installation
- On site intervention
- Maintenance
- Training

7 branches at your service:

PARIS EST (HEAD OFFICE)
102, rue des Frères Lumières / Z.I. des Chanoux
93330 NEUILLY-SUR-MARNE
Phone : +33 (0) 143 001 403

PARIS NORD
2, rue Edouard Branly
95220 HERBLAY

PARIS OUEST
9 rue Johannes Kepler
ZA de Trappes – Elancourt
78190 TRAPPES

ORLÉANS
122 rue de Champoigny
45140 INGRE

ROUEN
37, rue Désiré Granet - Zone de l'Etang
76800 SAINT-ÉTIENNE-DU-ROUVRAY

LILLE
Rue de la Zamin
59160 CAPINGHEM

DUNKERQUE
4, rue des Artisans
ZA du LAC - 59380 ARMBOUTS-CAPPEL















HUCHEZ, it is also: HORLOGES HUCHEZ

03 44 51 11 22

contact@horloges-huchez.fr

pointeuses.com
horloges-huchez.fr

horloges huchez

Specialising in clocks and time management solutions, Horloges Huchez has an historical experience in public clocks and churches and monuments bells. Horloges Huchez also develops timekeeping and time management systems and offers a wide range of time distribution
systems
as well as warning systems.

Horloges HUCHEZ
4, rue de la Croix - 60420 FERRIÈRES



PRO-LIFT SOLUTIONS

LIFTING DEVISE MECHANISM CLASSIFICATION

To determine the group for your lifting device, winch or block and tackle, three essential parameters are to be taken into account:

Maximum load to be lifted

Including the weight of the cable and any lifting accessories (hook, etc.) except where these are of a total weight of 5% or less of the load to be lifted.

Load condition

- Details in what proportions the lifting device is used at maximum load or reduced load.
- For an exact classification, it is preferably to calculate the average cubic value (k) using the formula below:

$$k = \sqrt[3]{(\beta_1 + \gamma)^3 \cdot t_1 + (\beta_2 + \gamma)^3 \cdot t_2 + ... + \gamma^3 \cdot t_\Delta}$$

where: **β =** effective or partial load nominal load
γ = dead weight maximum load
t = operating time with effective or partial load + dead weight total operating time
t Δ = operating time with dead weight only total operating time

Thus a distinction is made between four characterised load conditions:

Light	Lifting devices subjected exceptionally to the maximum load and normally to very light loads.	$k \leq 0.5$
Medium	Lifting devices subjected fairly often to the maximum load and normally to light loads.	$0.5 < k \leq 0.63$
Heavy	Lifting devices subjected frequently to the maximum load and normally to medium loads.	$0.63 < k \leq 0.8$
Very heavy	Lifting devices subjected regularly to loads close to the maximum load.	$0.8 < k \leq 1$

Operating class

- This is the average operating time per day, on the basis of 250 working days a year.
- The lifting device is considered to be in operation when it is moving; conversely, it is not during stoppage times, between raising and lowering for example.

These three parameters thus provide the means for classifying the devices into groups of mechanisms in accordance with this table you can use to determine the group for the lifting device you need:

Duty factor	OPERATING CLASS (or average daily operating time in hours, on the basis of 250 working days a year)							
Light	30 mn	1 h	2 h	4 h	8 h	16 h	More than	-
Medium	15 mn	30 mn	1 h	2 h	4 h	8 h	16 h	More than
Heavy	7 mn	15 mn	30 mn	1 h	2 h	4 h	8 h	16 h
Very heavy	-	7 mn	15 mn	30 mn	1 h	2 h	4 h	8 h

Solicitation	MECHANISM CLASSIFICATION							
According to FEM rules	1Dm	1Cm	1Bm	1Am	2m	3m	4m	5m
According to ISO standard	M1	M2	M3	M4	M5	M6	M7	M8

Let us take an example of calculation to determine a mechanism group and the choice of the winch which matches:

Data:
- Maximum load to be lifted 5000 kg
- Load condition 50% of time at the nominal load (for the lifting device)
  50% of time under no load
- Operating class 4 hours a day, 250 days a year.

In view of these elements:
- The characterised load condition (k) is thus: k = 0.79 =>« heavy »
- The mechanism group determined is: 3m (FEM) / M6 (ISO)
- The choice of winch in the HUCHEZ range will be:
  - INDUSTRIA 5 t (FEM/ISO 3m/M6) see page 46
  - 7500TE see page 54

Our technical sales staff is at your disposal to help you determine the characterised load condition corresponding to your case.

PRO-LIFT SOLUTIONS

TERMS OF SALES

These PROFESSIONAL GENERAL TERMS AND CONDITIONS are available for the supply of CATALOGUED HANDLING EQUIPMENT. For SPECIFIC EQUIPMENTS you have to refer to the corresponding PROFESSIONAL TERMS AND CONDITIONS.

EQUIPMENT AND THEIR FITTINGS

1 ▷ GENERAL PROVISIONS

1.1 ▷ Contract formation

Every order requires the purchaser's acceptance of these general terms and conditions. Therefore, any provisions that are contrary hereto and, particularly all general conditions that were previously transmitted by periodic circulars, shall not be enforceable against the seller unless the latter agrees thereto in writing.

A contract of sale is complete only after the seller's written acceptance of the purchaser's order. An accepted order shall not be cancelled without the seller's consent.

1.2 ▷ Specifications regarding the supply

Characteristics mentioned in catalogues, prospectuses and all other advertising materials and documents are given purely as an indication. The seller reserves the right to make any changes in its designs that it deems appropriate, even after acceptance of the orders, without, however, affecting the essential characteristics and performance.

1.3 ▷ Tests and acceptance

The costs of tests and acceptance requested by the purchaser are borne exclusively thereby.

1.4 ▷ Estimate (for repair)

The costs necessary for the issue of a repair estimate, such as the time of assembly or re-assembly, and travel expenses, are invoiced when the estimate is not followed by an order.

2 ▷ DELIVERY

The times for delivery commence to run after the sending of the acknowledgement of receipt and receipt of the instalment specified in paragraph 5. They are given purely as an indication and in total good faith.

Whatever the purpose of the equipment and terms of sale, delivery is deemed to be made in the seller's plants and stores.

Delivery is advised by a simple notice of availability. Such a notice signifies either the direct remittance of the equipment to the purchaser, delivery of the equipment in the seller's plants or stores to a shipper or carrier designated by the purchaser or, in the absence thereof, by the seller.

The purchaser must take possession of the equipment within ten days of the notice of availability. If the purchaser does not take the equipment at the location and on the date that are agreed, and provided that its delay is not due to an act or omission of the seller, the purchaser must make the payments as contractually specified, with delivery deemed to have been made. In such event, the seller handles the storage at the purchaser's risk and peril, insofar as the equipment has not been individualized.

In no event shall an exceeding of the specified time result in cancellation of the order, in the payment of damages and interest or in the application of any penalties, unless expressly confirmed in the acknowledgement of receipt of the order.

«The equipment is delivered, along with its instruction manual », which the user shall consult before putting the equipment into service.

3 ▷ RESERVATION OF OWNERSHIP AND TRANSFER OF RISKS

3.1 ▷ The seller retains full ownership of the subject equipment until full payment of the principal price and ancillary items.

3.2 ▷ As of the date of delivery, the purchaser assumes liability for damage that this equipment might incur or cause for any reason whatsoever.

3.3 ▷ The equipment shall not be resold or transformed until full payment thereof without the seller's prior consent. However, in the case of a resale, the seller may exercise a right to follow the property and claim the amounts due directly from the end customer.

4 ▷ TRANSPORT AND INSURANCE

Any measures that the seller might take in the interest or for the account of the purchaser regarding insurance, transport, etc… do not contravene the principle of delivery in its plants or stores.

The fact of possibly including the carriage cost in the price is not regarded as departure from the principle of delivery in the seller's plants or stores.

Any transport handled by the seller itself, whether or not the costs are charged to the purchaser, is deemed to be made under a carriage contract separate from the contract of sale.

In the absence of instructions, the seller undertakes the shipment in the purchaser's best interests. The equipment is insured only at the purchaser's express request.

In all circumstances, it is up to the purchaser to effectuate all verifications, express any reservations upon the arrival of the equipment, and, if necessary, initiate against the carrier the actions specified by article 103 and those that follow of the Commercial Code, within the times set by article 105.

5 ▷ PRICES, TERMS AND DELAY OF PAYMENT

Unless otherwise stipulated, the payments are made at the domicile of the seller's business, net and without discount, and are due under the following terms:

1/3 by cheque upon placement of the order (instalment)

1/3 by cheque upon delivery

the balance by accepted draft, payable from the date of delivery within the customary time of 30 days, whether for products and/or services.

Any provision or request meant to specify or obtain a time of payment that exceeds 30 days, which time limit is customary in the mechanical engineering industries, may be deemed to be abusive pursuant to article L. 442 6 7° of the Commercial Code, unless the customer provides a sound reason.

The invoice indicates the date on which the payment must be made. All amounts that are paid prior to delivery are deemed to be installments, and thus do not give the purchaser any right to cancel the contract of sale.

Any non-payment of an installment on the agreed date and any refusal to accept a bill of exchange when presented will lead to:

on the one hand, ipso jure and without prior notification, in accordance with article L441-6 of the Commercial Code, from the very first day overdue:

- the application of late payment interest equal to the most recent refinancing rate defined by the European Central Bank increased by ten points (modernisation of the economy law - LME - No.2008-776 of 4 August 2008), without prejudice to any damages and interest which may be claimed;
- the application of a flat-rate compensation for cost recovery fees totalling 40 euros (European directive 2011/7 of 16 February 2011, law 2012-387 of 22 March 2012 and decree 2012-1115 of 2 October 2012),
- additional compensation, based on documentary proof, if the cost recovery fees indicated are greater than this flat-rate compensation rate. Furthermore, any outstanding payments would become payable immediately.

on the other hand, if the vendor deems fit:

- the suspension or cancellation of all orders in progress,
- the cancellation, ipso jure, of the sales contract one month after the official demand, sent to the purchaser by registered letter with acknowledgement of receipt, to comply with their legal obligations. In this case, and without prejudice to any damages and interest which may be claimed, the purchaser must, in addition to their obligation to return the goods, pay the vendor a termination fee set at 20% of the price as evaluated at the date of termination. This fee will be charged to the payments already received.

6 ▷ WARRANTY

6.1 ▷ Scope of warranty

The seller commits that it will remedy any operating deficiencies due to a defect in the design, materials or performance (including assembly if it is responsible for this operation), within the limits of the provisions set forth hereinafter.

The warranty does not cover normal wear and tear, breakdowns due to a lack of maintenance or supervision, poor assembly or electrical connection, or, generally, to any manipulation or use failing to comply with the manufacturer's written instructions (including the normal requirements of use in the operating instructions) or to an event of force majeure. It does not apply to paint and surface coatings.

The warranty immediately ceases if the validity of the declaration of conformity expires because the purchaser used spare parts other than the original ones, or performed repair or modification work without the seller's written agreement.

In the event of use of the equipment outside of metropolitan France, the seller may change the scope and terms of warranty defined in these general terms and conditions. Unless otherwise stipulated, no warranty applies to used equipment; alienation of the equipment by the first user terminates the warranty.

6.2 ▷ The purchaser's obligations

In order to have the benefit of this warranty, the purchaser must immediately advise the seller in writing of any defects that it observes in the equipment and provide all proofs regarding the reality of said defects; it must facilitate the observation and correction of these defects.

6.3 ▷ Effective date and duration

The standard warranty is for a period of one year unless otherwise specified in the operating manual for the product concerned. It commences on the date of delivery as specified in paragraph 2, and terminates either at the period of one year or at the end of the specified duration of use, whichever occurs first.

If the conditions for using the equipment specify a labour regime that requires more than one work station of 8 hours, the duration of warranty may be reduced.

If the effective date of warranty is deferred, the warranty period may be extended for a period equal to the period of delay. However, if such delay is beyond the seller's control, the extenstion shall not exceed 3 months.

6.4 ▷ Modes of exercising the warranty

During the period of warranty, the seller has the duty to replace the parts that are deemed to be defective after examination by its technical service or, if it so prefers, to repair them free of charge. The warranty excludes any other services or indemnification.

Repairs under the warranty are generally made in the seller's workshops, with the purchaser responsible for sending the equipment to be repaired and the defective parts thereto at the purchaser's expense.

When work on the equipment is performed outside of its workshops, the travel and accommodation expenses incurred by the seller for its agents are billed to the purchaser. However, the labour costs related to the disassembly or re-assembly of these parts are incurred by the seller when these operations are carried out by its employees or agents.

The replaced parts become the seller's property and must be returned thereto at the purchaser's expense.

Replacement parts are supplied free of charge ex-factory of the seller. Reshipment of repaired equipment is at the purchaser's expense.

Replacement parts and repaired parts are warranted under the same terms and conditions as those for new parts and for the same length of time. For the other components, servicing under warranty has the effect of extending the warranty by the length of time during which the equipment is tied up.

For items of a particular relative importance that are not manufactured by the seller itself and which carry the brand of specialized manufacturers, the warranty that may vary according to the manufacturer is that which is provided thereby.

7 ▷ DISPUTES

In the event of dispute regarding a supply or its payment, the Commercial Court of Beauvais has sole jurisdiction whatever the terms and conditions of sale and the term of payment, even in the event of an action against a guarantor or a multiplicity of defendants. However, prior to or concomitantly with the initiation of any legal, administrative or arbitration proceeding, the parties shall have recourse to an expert's opinion pursuant to the regulation of the Codified Amicable Expert's Opinion (E.A.C.) available at :

CNIDECA - 15 rue Péclet – F 75015 PARIS - Tel: 01 48 28 75 75 – Fax: 01 48 28 74 34



OUR VALUES

The know-how and expertise of our teams in each of their domains (Production, Design, Sales...)

A very active innovation policy

HUCHEZ relies on its Engineering Department to design products adapted to the constantly changing needs of professionals.

The quality of our products

Our products are designed as per the Machine Directive 2006/42/EC and enforced European standards.

A company with a worldwide outlook

HUCHEZ has a capacity to adapt to the specific needs of international markets with a team dedicated to Europe, Africa, the Middle East ....

These values are supported by our staff who is committed to the development of HUCHEZ, thus putting customer satisfaction at the heart of its priorities.

MADE IN FRANCE

HUCHEZ - 07/2022

huchez.com
4, rue Michel Hammid
60420 FERRIERES
FRANCE
Phone +33 (0) 344 511 133
contact@huchez.fr

HUCHEZ
PRO-LIFT SOLUTIONS